Sprague Elementary School
401 School Street
Wellesley, MA

2019

Chiller Replacement

Prepared For:

Town of Wellesley
Facilities Management
888 Worcester Street, Suite 310
Wellesley, MA 02482

Prepared By:

BLW Engineers, Inc.
311 Great Road
Post Office Box 1551
Littleton, MA 01460

July 31, 2019

CHILLED WATER SYSTEM

Existing Conditions

The existing chilled water systems is located in a penthouse mechanical room and on the roof. The chilled water system was installed in 2001 and is nearing its anticipated the end of its operational life expectancy (20 years) and appears ready for replacement. The chilled water system consists of the following:

1. Two (2) water cooled chillers, York models YCWS0149SC17YB; the chillers are rated for 320 gpm at 55F EWT, 45F EWT or 127.3 tons. Note: One of the refrigeration circuits on chiller C-2 had a refrigeration leak and is in need of repair.
2. The existing cooling tower, BAC model VTL-272-PDXR, is rated for 780 gpm at 95F EWT, 85F LWT or 255 tons of condenser water capacity. The cooling tower is located adjacent to the chilled water penthouse mechanical room supported on structural steel supports and vibration isolators. Note: No special acoustic provisions have been provided for the cooling tower.
3. The cooling tower is provided with makeup water from a protected water system; the exterior makeup water piping is provided with heat trace to protect piping from freezing.
4. The chilled water system is provided with three (3) building chilled water pumps (P-4, P-5. P-6), Taco model FE2510 rated for 320 gpm at 78' TDH at 10hp. There is an individual pump interlocked with an individual chiller operation based on maintaining the chilled water system supply water temperature setpoint and the third pump is a standby.
5. The chilled water system is provided with two (2) lead/standby condenser water pumps (P-7, P-8), Taco model FE3010 rated for 780 gpm at 40' TDH at 10hp. The cooling tower, pumps and chillers are interconnected by an 8" condenser water piping system; exterior portions of the condenser water piping is provided with heat trace to protect piping from freezing.
6. The chilled water system is provided with a R22 refrigerant detection/alarm system.
7. A refrigeration exhaust system is provided for the chiller mechanical room consisting of a roof mounted exhaust fan (EF-18), exhaust air ductwork and an intake hood with intake air duct into the mechanical room. The ¼ hp exhaust fan is a Greenheck model GB-141-4 rated for 1,680 cfm at 0.375"w.c. ESP. Note: The intake air is not provided with a motor operated damper to prevent cold air from infiltrating the space when the exhaust fan is not in refrigeration leak operation.
8. The chilled water system was designed with three way valves on the chilled water coils making a constant volume system.
9. The chilled water system is provided with a chemical feeder and is designed for 25% propylene glycol solution. The chilled water system is also provided with water specialties including an expansion tank and air separator.
10. The chilled water system is controlled by a Johnson Metasys direct digital control (DDC) system.

Replacement Options

<u>Option 1: Water Cooled Chillers</u>

Scope of Work:

1. Remove the existing two (2) water cooled chiller; chillers will have to be disassembled on site and removed from penthouse mechanical room due to limited access to the roof.
2. Remove existing cooling tower.
3. Provide two (2) new water cooled chillers, York YVWADBDXJE0141SA, each rated for 140.9 tons of cooling capacity at 0.69 KW/ton with 25% Propylene Glycol in current location. Note: Chillers will need to be shipped disassembled require field assembly due to limited mechanical room access from roof.
4. Provide new cooling tower, BAC VTL-272-P with Baltibond coated Drift Eliminators, 304 SS Water Contact Cold Water Basin and hot dipped Galvy vibration isolation rails in current location; reconnect the existing protected water system for cooling tower makeup water to new cooling tower.
5. Provide 40 Hp variable speed drive for cooling tower fan control for condenser water temperature control.
6. Modify the chilled water piping/pumping arrangement for primary secondary operation; Replace existing three (3) building chilled water circulating pumps with new lead/standby building primary chilled water circulating pumps and provide two (2) new chilled water secondary pumps rated for 640 gpm at 78'TDH.
7. Consider providing variable speed drives for building primary chilled water pumps, differential pressure setpoint controls and changing thee way valves over time to two way control valves for energy savings on pump horsepower operation.
8. Replace existing two (2) condenser water circulating pumps with new two (2) new lead/standby condenser water circulating pumps rated for 780 gpm at 40' TDH.
9. Provide new emergency shutoff switches outside chilled water mechanical room doors to shut down chillers upon emergency condition.
10. Provide a new R-134a refrigeration leak detection monitoring system with alarms and beacon outside chilled water mechanical room doors.
11. Reconnect the refrigeration exhaust system to new R-134a refrigeration leak detection monitoring system to operate in alarm condition; add new motorized damper to existing air intake ductwork. Note: The exhaust system size has been verified to provide adequate exhaust for the largest refrigeration system in the room (1 chiller; 280 lbs of R-134a refrigerant) in accordance with applicable code requirements.
12. The glycol feeder, expansion tank and air separator will also be replaced; the chilled water system will be tested and recharged to a 25% propylene glycol solution.
13. Electrically disconnect existing mechanical equipment to be removed and provide new power for all new mechanical equipment.
14. Reconnect to existing Johnson Metasys Control system; provide all software, dynamic graphic updates and control components for a complete and operable system.
15. Balance system.
16. Commission System.

Energy Usage:

System	Efficiency (kw/ton)	Annual Energy Usage KWH	Operating Cost ($ 0.132/KWH)
Proposed System	0.62	98,459.59	$ 12,996.67

Estimated Construction Cost:

The estimated construction costs for Option 1 is **$ 800,144.00.**

<u>Option 2: Air Cooled Chillers</u>

Scope of Work:

1. Remove the existing two (2) water cooled chiller; chillers will have to be disassembled on site and removed from penthouse mechanical room due to limited access to the roof.
2. Remove existing cooling tower.
3. Remove cooling tower makeup water piping back into chiller mechanical room.
4. Provide two (2) air cooled chillers, Trane CGAM 130, each rated for 126.5 tons of cooling capacity at 1.2 KW/ton with 35% Propylene Glycol in former cooling tower location. Each chiller's operating weight is approximately 7,900 lbs or 15,800 lbs total which is more that operating weight of 9,500 lbs for the existing cooling tower; this option will require modifications to the existing structural supports to accommodate the new chillers. Provide additional acoustical provisions at roof level to comply with applicable codes for noise transmission.
5. Provide two (2) new chilled water building pumps rated for 640 gpm, 78' TDH and 10hp.
6. Since the chillers will be located outdoors and the existing system is designed for a 25% propylene glycol solution which only gives burst protection to 0F, a chilled water exchanger will be required to accommodate a 35% glycol solution for the chiller and exterior chilled water piping while maintaining the design condition of 25% glycol solution for the building chilled water coils.
7. Provide three (2 chiller/1 standby) new chiller water pumps rated for 320 gpm, 40' TDH and 5hp on the chiller side of the chilled water exchanger.
8. Consider providing variable speed drives for building primary chilled water pumps, differential pressure setpoint controls and changing thee way valves over time to two way control valves for energy savings on pump horsepower operation.
9. Modify existing chilled water piping systems to accommodate the new equipment.
10. Provide new motorized damper to existing air intake ductwork and space temperature sensor; interlock with EF-18 for head dissipation system for mechanical room.

11. The building glycol feeder, expansion tank and air separator will also be replaced; the chilled water system will be tested and recharged to a 25% propylene glycol solution.
12. Provide new glycol feeder, expansion tank and air separator for the chiller side of the chilled water exchanger; the chilled water system will be charged to a 35% propylene glycol solution.
13. Electrically disconnect existing mechanical equipment to be removed and provide new power for all new mechanical equipment.
14. Reconnect to existing Johnson Metasys Control system; provide all software, dynamic graphic updates and control components for a complete and operable system.
15. Balance system.
16. Commission System.

Energy Usage:

System	Efficiency (kw/ton)	Annual Energy Usage KWH	Operating Cost ($ 0.215/KWH)
Proposed System	1.22	120,134.65	$ 15,857.77

Estimated Construction Cost:

The estimated construction costs for Option 1 is **$ 662.860.00**.

<u>Option 3: Modular Air Cooled Chiller</u>

Scope of Work:

1. Remove the existing two (2) water cooled chiller; chillers will have to be disassembled on site and removed from penthouse mechanical room due to limited access to the roof.
2. Remove existing cooling tower.
3. Remove cooling tower makeup water piping back into chiller mechanical room.
4. Provide one (1) air cooled chillers, MultiStack ASP060, rated for 240 tons of cooling capacity at 1.2 KW/ton with 35% Propylene Glycol in former cooling tower location. The chiller's operating weight is approximately 19,100 lbs total which is more that operating weight of 9,500 lbs for the existing cooling tower; this option will require modifications to the existing structural supports to accommodate the new chillers. In addition, provide additional acoustical provisions at roof level to comply with applicable codes for noise transmission.
5. Provide two (2) new chilled water building pumps rated for 640 gpm, 78' TDH and 20hp.
6. Since the chiller will be located outdoors and the existing system is designed for a 25% propylene glycol solution which only gives burst protection to 0F, a chilled water exchanger will be required to accommodate a 35% glycol solution for the chiller and exterior chilled water

piping while maintaining the design condition of 25% glycol solution for the building chilled water coils.

7. Provide two (2) new lead/standby chiller water pumps rated for 320 gpm, 40' TDH and 5hp on the chiller side of the chilled water exchanger.
8. Consider providing variable speed drives for building primary chilled water pumps, differential pressure setpoint controls and changing thee way valves over time to two way control valves for energy savings on pump horsepower operation.
9. Modify existing chilled water piping systems to accommodate the new equipment.
10. Provide new motorized damper to existing air intake ductwork and space temperature sensor; interlock with EF-18 for head dissipation system for mechanical room.
11. The building glycol feeder, expansion tank and air separator will also be replaced; the chilled water system will be tested and recharged to a 25% propylene glycol solution.
12. Provide new glycol feeder, expansion tank and air separator for the chiller side of the chilled water exchanger; the chilled water system will be charged to a 35% propylene glycol solution.
13. Electrically disconnect existing mechanical equipment to be removed and provide new power for all new mechanical equipment.
14. Reconnect to existing Johnson Metasys Control system; provide all software, dynamic graphic updates and control components for a complete and operable system.
15. Balance system.
16. Commission System.

Energy Usage:

System	Efficiency (kw/ton)	Annual Energy Usage KWH	Operating Cost ($ 0.215/KWH)
Proposed System	1.20	118,601.53	$ 15,655.40

Estimated Construction Cost:

The estimated construction costs for Option 1 is **$ 757,103.00**.

<u>Option 4: Evaporative Cooled Chillers</u>

Scope of Work:

1. Remove the existing two (2) water cooled chiller; chillers will have to be disassembled on site and removed from penthouse mechanical room due to limited access to the roof.
2. Remove existing cooling tower.
3. Provide one (1) evaporative cooled chillers, TSI 200, each rated for 200 tons of cooling capacity at 0.83 KW/ton with 35% Propylene Glycol in former cooling tower location. The chiller's

operating weight is approximately 26,800 lbs total which is significantly more that operating weight of 9,500 lbs for the existing cooling tower; this option will require modifications to the existing structural supports to accommodate the new chillers. In addition, provide additional acoustical provisions at roof level to comply with applicable codes for noise transmission.

4. Provide two (2) new chilled water building pumps rated for 640 gpm, 78' TDH and 20hp.
5. Since the chiller will be located outdoors and the existing system is designed for a 25% propylene glycol solution which only gives burst protection to 0F, a chilled water exchanger will be required to accommodate a 35% glycol solution for the chiller and exterior chilled water piping while maintaining the design condition of 25% glycol solution for the building chilled water coils.
6. Reconnect cold water makeup piping to new evaporative chiller.
7. Provide two (2) new lead/standby chiller water pumps rated for 320 gpm, 40' TDH and 5hp on the chiller side of the chilled water exchanger.
8. Consider providing variable speed drives for building primary chilled water pumps, differential pressure setpoint controls and changing thee way valves over time to two way control valves for energy savings on pump horsepower operation.
9. Modify existing chilled water piping systems to accommodate the new equipment.
10. Provide new motorized damper to existing air intake ductwork and space temperature sensor; interlock with EF-18 for head dissipation system for mechanical room.
11. The building glycol feeder, expansion tank and air separator will also be replaced; the chilled water system will be tested and recharged to a 25% propylene glycol solution.
12. Provide new glycol feeder, expansion tank and air separator for the chiller side of the chilled water exchanger; the chilled water system will be charged to a 35% propylene glycol solution.
13. Electrically disconnect existing mechanical equipment to be removed and provide new power for all new mechanical equipment.
14. Reconnect to existing Johnson Metasys Control system; provide all software, dynamic graphic updates and control components for a complete and operable system.
15. Balance system.
16. Commission System.

Energy Usage:

System	Efficiency (kw/ton)	Annual Energy Usage KWH	Operating Cost ($ 0.215/KWH)
Proposed System	0.83	90,238.92	$ 10,508.82

Estimated Construction Cost:

The estimated construction costs for Option 1 is **$ 984,803.00**.

Estimated Construction Costs

BLW

BLW ENGINEERS, INC.
311 Great Road, Post Office Box 1551, Littleton, Massachusesetts 01460 tel 978.486.4301 fax 978.428.0067 e-mail Info@blwengineers.com

Construction Cost Estimate

Project phase: Evaluation
Trade Specification Section: All
By: KRB **Checked By:** KRB

Project: Option 1 - Water Cooled Chillers
Sprague Elementary School
Wellesley, Massachusetts
Project Number: 18035.00

Sheet 1 of 1
Date 08.06.19

Description	Qty	Units	Material Unit Cost	Material Total	Labor Unit Cost	Labor Total	Total
Option 1 - Water Cooled Chillers							
Division 01 - General Requirements							
General Conditions	1	LS			75,000	75,000	75,000
Division 02 - Existing Conditions							
Demolition	1	LS			25,000	25,000	25,000
Division 05 - Metals							
Structural Steel	1	LS			2,500	2,500	2,500
Division 09 - Finishes							
Acoutstical Treatment	1	LS			50,000	50,000	50,000
Division 23 - HVAC							
Chiller - 125	2	EA	77,000	154,000	15,000	30,000	184,000
Cooling Tower - 255 Tons w VFD	1	EA	115,000	115,000	15,000	15,000	130,000
Chiller Pump	3	EA	4,000	12,000	1,500	4,500	16,500
Condenser Pumps	2	EA	3,000	6,000	1,500	3,000	9,000
Building Chilled Water Pumps w/VFD	2	EA	5,000	10,000	1,500	3,000	13,000
Piping, Insulation & Valves	1	LS	25,000	25,000	50,000	50,000	75,000
Glycol Feeder/Glycol	1	LS	2,500	2,500	5,000	5,000	7,500
Water Specialties	1	EA	3,750	3,750	2,500	2,500	6,250
Refrigeration Detection/Alarm	1	LS	2,500	2,500	1,275	1,275	3,775
Automatic Temperature Controls	1	LS	2,500	2,500	7,500	7,500	10,000
Testing & Balancing	1	LS			2,500	2,500	2,500
Commissioning	1	LS			2,500	2,500	2,500
Division 26 - Electrical							
Demolition	1	LS			5,000	5,000	5,000
Equipment Power Wiring	1	LS	5,000	5,000	10,000	10,000	15,000
Subtotal				$ 338,250		$ 294,275	$ 632,525
15% Overhead & Profit							$ 94,879
Subtotal							$ 727,404
15% Contingency							$ 94,879
Subtotal							$ 727,404
10% Design Services							$ 72,740
						TOTAL	**$ 800,144**

BLW

BLW ENGINEERS, INC.
311 Great Road, Post Office Box 1551, Littleton, Massachusesetts 01460 tel 978.486.4301 fax 978.428.0067 e-mail Info@blwengineers.com

Construction Cost Estimate

Project phase: Evaluation
Trade Specification Section: All
By: KRB **Checked By:** KRB

Project: Option 2 - Air Cooled Chillers
Sprague Elementary School
Wellesley, Massachusetts
Project Number: 18035.00

Sheet 1 of 1
Date 08.06.19

Description	Qty	Units	Material Unit Cost	Material Total	Labor Unit Cost	Labor Total	Total
Option 2 - Air Cooled Chillers							
Division 01 - General Requirements							
General Conditions	1	LS			60,000	60,000	60,000
Division 02 - Existing Conditions							
Demolition	1	LS			25,000	25,000	25,000
Division 05 - Metals							
Structural Steel	1	LS			20,000	20,000	20,000
Division 09 - Finishes							
Acoutstical Treatment	1	LS			50,000	50,000	50,000
Division 23 - HVAC							
Chiller - 125	2	EA	81,000	162,000	9,000	18,000	180,000
Chilled Water Exchanger	1	EA	12,000	12,000	3,000	3,000	15,000
Chiller Pump	3	EA	4,000	12,000	1,500	4,500	16,500
Building Chilled Water Pumps w/VFD	2	EA	5,000	10,000	1,500	3,000	13,000
Piping, Insulation & Valves	1	LS	25,000	25,000	50,000	50,000	75,000
Glycol Feeder/Glycol	2	LS	2,500	5,000	5,000	10,000	15,000
Water Specialties	2	EA	3,750	7,500	2,500	5,000	12,500
Automatic Temperature Controls	1	LS	5,000	5,000	12,500	12,500	17,500
Testing & Balancing	1	LS			3,750	3,750	3,750
Commissioning	1	LS			3,750	3,750	3,750
Division 26 - Electrical							
Demolition	1	LS			5,000	5,000	5,000
Equipment Power Wiring	1	LS	4,000	4,000	8,000	8,000	12,000
Subtotal				$ 242,500		$ 281,500	$ 524,000
15% Overhead & Profit							$ 78,600
Subtotal							$ 602,600
15% Contingency							$ 78,600
Subtotal							$ 602,600
10% Design Services							$ 60,260
						TOTAL	**$ 662,860**

BLW

BLW ENGINEERS, INC.
311 Great Road, Post Office Box 1551, Littleton, Massachusesetts 01460 tel 978.486.4301 fax 978.428.0067 e-mail Info@blwengineers.com

Construction Cost Estimate

Project phase: Evaluation
Trade Specification Section: All
By: KRB **Checked By:** KRB

Project: Option 3 - Modular Air Cooled Chillers
Sprague Elementary School
Wellesley, Massachusetts
Project Number: 18035.00

Sheet 1 of 1
Date 08.06.19

Description	Qty	Units	Material Unit Cost	Material Total	Labor Unit Cost	Labor Total	Total
Option 3 - Modular Air Cooled Chillers							
Division 01 - General Requirements							
General Conditions	1	LS			60,000	60,000	60,000
Division 02 - Existing Conditions							
Demolition	1	LS			25,000	25,000	25,000
Division 05 - Metals							
Structural Steel	1	LS			30,000	30,000	30,000
Division 09 - Finishes							
Acoutstical Treatment	1	LS			50,000	50,000	50,000
Division 23 - HVAC							
Chiller - 240 tons	1	EA	240,000	240,000	10,000	10,000	250,000
Chilled Water Exchanger	1	EA	12,000	12,000	3,000	3,000	15,000
Chiller Pump	2	EA	4,000	8,000	1,500	3,000	11,000
Building Chilled Water Pumps w/VFD	2	EA	5,000	10,000	1,500	3,000	13,000
Piping, Insulation & Valves	1	LS	25,000	25,000	50,000	50,000	75,000
Glycol Feeder/Glycol	2	LS	2,500	5,000	5,000	10,000	15,000
Water Specialties	2	EA	3,750	7,500	2,500	5,000	12,500
Automatic Temperature Controls	1	LS	5,000	5,000	12,500	12,500	17,500
Testing & Balancing	1	LS			3,750	3,750	3,750
Commissioning	1	LS			3,750	3,750	3,750
Division 26 - Electrical							
Demolition	1	LS			5,000	5,000	5,000
Equipment Power Wiring	1	LS	4,000	4,000	8,000	8,000	12,000
Subtotal				$ 316,500		$ 282,000	$ 598,500
15% Overhead & Profit							$ 89,775
Subtotal							$ 688,275
15% Contingency							$ 89,775
Subtotal							$ 688,275
10% Design Services							$ 68,828
						TOTAL	**$ 757,103**

BLW

BLW ENGINEERS, INC.
311 Great Road, Post Office Box 1551, Littleton, Massachusesetts 01460 tel 978.486.4301 fax 978.428.0067 e-mail Info@blwengineers.com

Construction Cost Estimate

Project phase: Evaluation
Trade Specification Section: All
By: KRB **Checked By:** KRB

Project: Option 4 - Evaporative Cooled Chillers
Sprague Elementary School
Wellesley, Massachusetts
Project Number: 18035.00

Sheet 1 of 1
Date 08.06.19

Description	Qty	Units	Material Unit Cost	Material Total	Labor Unit Cost	Labor Total	Total
Option 4 - Evaporative Cooled Chillers							
Division 01 - General Requirements							
General Conditions	1	LS			90,000	90,000	90,000
Division 02 - Existing Conditions							
Demolition	1	LS			25,000	25,000	25,000
Division 05 - Metals							
Structural Steel	1	LS			40,000	40,000	40,000
Division 09 - Finishes							
Acoutstical Treatment	1	LS			50,000	50,000	50,000
Division 23 - HVAC							
Chiller - 200 tons	1	EA	375,000	375,000	15,000	15,000	390,000
Chilled Water Exchanger	1	EA	12,000	12,000	3,000	3,000	15,000
Chiller Pump	2	EA	4,000	8,000	1,500	3,000	11,000
Building Chilled Water Pumps w/VFD	2	EA	5,000	10,000	1,500	3,000	13,000
Piping, Insulation & Valves	1	LS	25,000	25,000	50,000	50,000	75,000
Glycol Feeder/Glycol	2	LS	2,500	5,000	5,000	10,000	15,000
Water Specialties	2	EA	3,750	7,500	2,500	5,000	12,500
Automatic Temperature Controls	1	LS	5,000	5,000	12,500	12,500	17,500
Testing & Balancing	1	LS			3,750	3,750	3,750
Commissioning	1	LS			3,750	3,750	3,750
Division 26 - Electrical							
Demolition	1	LS			5,000	5,000	5,000
Equipment Power Wiring	1	LS	4,000	4,000	8,000	8,000	12,000
Subtotal				$ 451,500		$ 327,000	$ 778,500
15% Overhead & Profit							$ 116,775
Subtotal							$ 895,275
15% Contingency							$ 116,775
Subtotal							$ 895,275
10% Design Services							$ 89,528
						TOTAL	**$ 984,803**

Energy Evaluations

Energy Usage
Sprague Elementary School, Wellesley, MA
BLW Job No. 19275.00

Design Assumptions

Outside Air Temperature	Summer			88	F DB	74	F WB
Indoor Air Temperature	Summer	Occupied		75	F DB	62.6	F WB
Building Cooling	Occupied			1,840,000	Btuh		
	Unoccupied			0	Btuh		
Energy Costs	Electric	Chiller	$	0.132	kwh		
Building Area	70,000	SF					
Cooling Data	Occupied			1,905	hours	13,998	F-Hrs
	Unoccupied			0	hours	0	F-Hrs

Option 1 - Water Cooled Chiller

Electrical Utilization	Chiller	C-1,2	**0.62**	KW/Ton	P-3,4,5	9.66	BHP	0.6 Factor
					P-6,7	10.65	BHP	0.8 Factor
					CT-1	32	BHP	0.48 Factor

Chiller	=	13,998	F-Hrs	x	1,840,000	Btuh	x	1	ton		$ 0.132	=	$	6,273.50
Occupied		28	F		1.61	ton/KW		12,000.00	Btuh		KWH			
Building Pump	=	1,905	Hours	x	11.592	Hp	x	$ 0.132	Kwh	x	0.746	=	$	2,174.53
Condenser Pump	=	1,905	Hours	x	8.52	Hp	x	$ 0.132	Kwh	x	0.746	=	$	1,598.26
CT Fan		1,905	Hours	x	15.36	HP	x	$ 0.132	Kwh	x	0.746	=	$	2,881.37

Occupied

Option 1 Electrical	=	$	12,996.67
Option 1 Electrical (KWH)	=		98,459.59

Option 2 - Air Cooled Chiller

Electrical Utilization		Chiller	C-1,2		**1.22**	KW/Ton	P-3,4		17.72	BHP	0.6	Factor	
							P-6,7		9.66	BHP	0.8	Factor	
Chiller	=	13,998	F-Hrs	x	1,840,000	Btuh	x	1	ton	$ 0.132	=	$	12,344.64
Occupied		28	F		0.82	ton/KW		12,000.00	Btuh	KWH			
Building Pump	=	1,905	Hours	x	10.632	Hp	x	$ 0.132	Kwh	x 0.746	=	$	1,994.45

Proposed Chillers

YORK BY JOHNSON CONTROLS	WATER-COOLED LIQUID CHILLERS SEMI-HERMETIC SCREW 60 HZ	
RENEWAL PARTS	Supersedes 201.24-RP1 (613)	Form: 201.24-RP1 (514)

MODELS YCWS0100, 0120, 0140, 0180, 0200, 0220 and YCWS0240 SC

REMOTE CONDENSER MODELS YCRS0100, 0120, 0140, 0180, 0200, 0220 and YCRS0240 SC

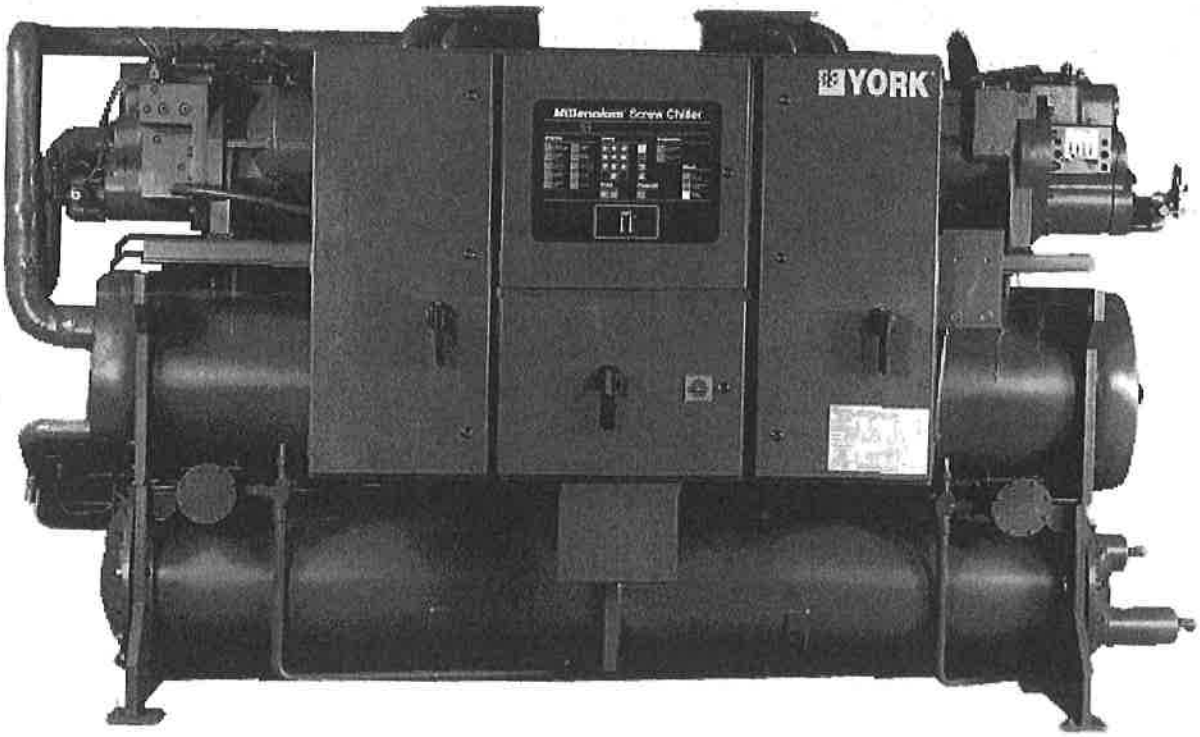

91 - 216 TON
320 - 760 kW
R-22
STYLE SC

200-3-60
230-3-60
315-3-60
460-3-60
575-3-60
MODELS ONLY

Issue Date:
May 30, 2014

Design Conditions Datasheet

Unit Tag	Qty	Model No	Net Cooling Capacity (ton.R)	Nominal Voltage	Refrigerant Type
CH-2	1	YVWABDBDFXJE0141SA	140.9	460-3-60.0	R134a

PIN:								
YVWABDBDFX	JE0141SAX4	6BXXSSSXXA	LXXSXREXXX	AC203EXXSA	X45321CXX1	CGPX95260C	XXSCGWLBFS	XXX1XXXXXX
....5...10	....5...20	....5...30	....5...40	....5...50	....5...60	....5...70	....5...80	....5...90

Evaporator Data			Condenser Data			Performance Data	
EWT (°F)	55.00		EWT (°F)	85.00		Full Load Efficiency (kW/ton.R)	0.6899
LWT (°F)	45.00		LWT (°F)	95.00		IPLV.IP (kW/ton.R)	NPLV.IP (kW/ton.R)
Flow (USGPM)	353.7		Flow (USGPM)	406.5		Heat Rejection (MBH)	2023
Pressure Drop (ft H2O)	6.24		Pressure Drop (ft H2O)	7.06		**Physical Data**	
Fluid	Propylene Glycol (%)	25	Fluid	Water		Rigging Wt. (lb)	8214
Fouling Factor (h.ft².F/Btu)	0.000100		Fouling Factor (h.ft².F/Btu)	0.000250		Operating Wt. (lb)	8882
Fluid Volume (USGAL)	49.00		Fluid Volume (USGAL)	44.00		Refrigerant Charge (lb)	280
Min Fluid Flow Rate (USGPM)	330.0		Min Fluid Flow Rate (USGPM)	240.0		Length (in)	116.6
Max Fluid Flow Rate (USGPM)	910.0		Max Fluid Flow Rate (USGPM)	910.0		Width (in)	55.6
Evap Type	Hybrid Falling Film		Cond Type	Water Cooled Condenser		Height (in)	72.7
Chiller Type	Water Cooled VSD Screw		Compressor Type	VSD Screw - Semi Hermetic			
Number Passes	2		Number Passes	2			

Electrical Data				
Circuit	1	2	3	4
Compressor RLA	135	0	0	0
Compressor Overload Setting	168	0	0	0

Single Point				
Min. Circuit Ampacity	165			
Min. Non-Fused Disconnect (A)	200			
Min. Fuse / CB Rating (A)	200			
Max. Fuse / CB Rating (A)	250			
Unit Short Circuit Withstand (STD)	65 [kA]			
Wires Per Phase	1			
Wire Range (Lug Size)	2/0~500 kcmil			
Starter Type	VSD		**Operating Condition Electrical Data**	
			Compressor kW	97.24
			Total kW	97.24
			Chiller FLA	139

Notes:
Sound Data in accordance with AHRI Standard 575
Nominal Current based on design conditions
Subject to change without prior notice
Min flow rate is for chillers using water. For glycol chillers please contact the application engineering team.
This order is not valid without inclusion of an SQ for VSD cooling booster pump. This SQ is required to ensure proper cooling of the VSD in low pressure drop situations.

Certified in accordance with the AHRI Water-Cooled Water-Chilling and Heat Pump Water-Heating Packages Certification Program, which is based on AHRI Standard 550/590 (I-P) and AHRI Standard 551/591 (SI). Certified units may be found in the AHRI Directory at www.ahridirectory.org.
Unit contains freeze protection fluids in the condenser or in the evaporator with a leaving chilled fluid temperature above 32 DEG F [0 DEG C] and is certified when rated per the Standard with water. Auxiliary components included in total KW - Oil heaters, Chiller controls. Auxiliary power is already included in the compressor power

AHRI CERTIFIED®
www.ahridirectory.org
Water-Cooled Water Chilling and Heat Pump Water-Heating Packages AHRI Standards 550/590 and 551/591

ASHRAE Standard 90.1-2010 and ASHRAE Standard 90.1-2013 & 2016 Compliant.

Part Load Rating Data

Load %	Capacity (ton.R)	COND EWT (°F)	COND LWT (°F)	Total kW	Unit Efficiency (kW/ton.R)
100	140.9	85.00	95.00	97.24	0.6899
75	105.7	75.00	82.15	53.27	0.5039
50	70.47	65.00	69.58	24.89	0.3532
25	35.23	65.00	67.31	13.50	0.3830

Sound Pressure Levels (In Accordance with AHRI 575)

Load %	63 Hz (dB)	125 Hz (dB)	250 Hz (dB)	500 Hz (dB)	1 kHz (dB)	2 kHz (dB)	4 kHz (dB)	8 kHz (dB)	LpA
100	69	80	69	84	84	73	70	68	87
75	78	80	61	75	81	72	64	68	82
50	74	60	73	74	73	69	57	69	77
25	72	67	69	69	72	60	55	70	75

Note: Unit is equipped with Low Sound Kit (Level 1 Reduction).

THE OCTAVE AND A-WEIGHTED SOUND PRESSURE LEVELS ARE THE LEVELS EXPECTED TO BE OBTAINED IF MEASUREMENTS ARE PERFORMED IN ACCORDANCE WITH AHRI STANDARD 575-08, METHOD OF MEASURING MACHINERY SOUND WITHIN EQUIPMENT ROOMS.

[REPORT_UNIT.SOUND.SOUNDNOTES.2:NotFound]

TOLERANCES: THE SOUND LEVEL OF IDENTICAL UNIT SELECTIONS CAN VARY DUE TO MANUFACTURING TOLERANCE AND TEST REPEATABILITY. VARIATIONS OF +/-3 dBA ON THE A-WEIGHTED LEVELS AND +/-5 DB ON THE OCTAVE BAND LEVELS ARE POSSIBLE.

Performance at AHRI Conditions

Evaporator Data		Condenser Data		Performance Data	
EWT (°F)	54.00	EWT (°F)	85.00	Full Load Efficiency (kW/ton.R)	0.6472
LWT (°F)	44.00	LWT (°F)	94.30	IPLV.IP (kW/ton.R)	0.3979
Flow Rate (USGPM)	337.3	Flow Rate (USGPM)	432.7	Heat Rejection (MBH)	2002
Pressure Drop (ft H2O)	6.34	Pressure Drop (ft H2O)	7.90	Cooling Capacity (ton.R)	140.9
Fluid	Water	Fluid	Water		
Fouling Factor (h.ft².F/Btu)	0.000100	Fouling Factor (h.ft².F/Btu)	0.000250		
Fluid Volume (USGAL)	49.00	Fluid Volume	44.00		

		(USGAL)			

Note: Unit rated at design condition capacity.

NOZZLE LEGEND

EVAPORATOR INLET	LEFT SIDE	2 PASSES	5" DIA. (150 Psig DWP)
EVAPORATOR OUTLET	LEFT SIDE	2 PASSES	5" DIA. (150 Psig DWP)
CONDENSER INLET	LEFT SIDE	2 PASSES	5" DIA. (150 Psig DWP)
CONDENSER OUTLET	LEFT SIDE	2 PASSES	5" DIA. (150 Psig DWP)

Victaulic Grooved Nozzles (per ANSI / AWWA C-606)

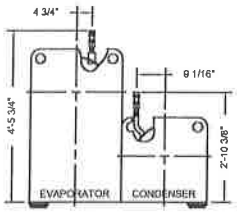

RELIEF VALVE DETAIL

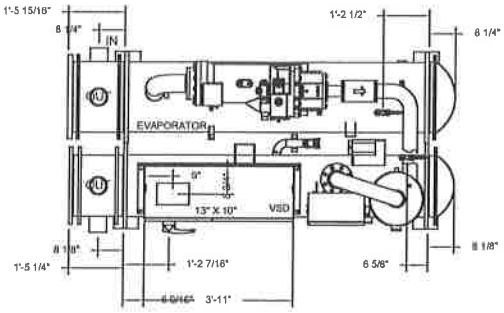

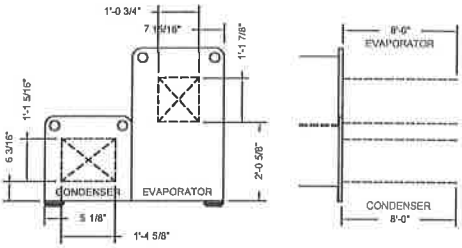

TUBE PULL AREA

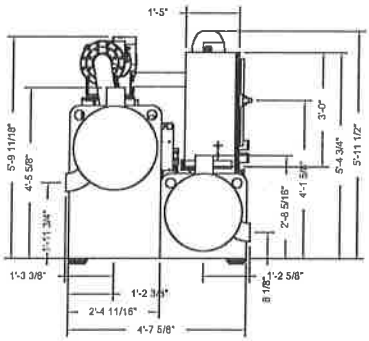

LEFT END VIEW

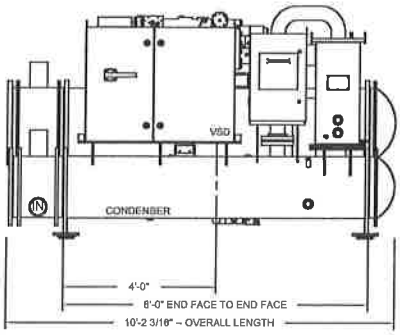

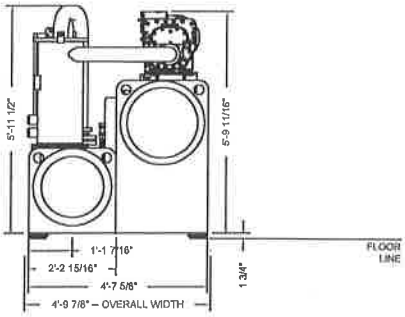

RIGHT END VIEW

PRODUCT DRAWING YORK YVWA Water Cooled Screw Chiller MODEL: YVWA BD BD FX **NOT FOR CONSTRUCTION**	Project Name: [wellesley] New Chiller Location: Engineer: Contractor: For:	Sold To: Cust Purch Order#: Contract#: UNIT TAG: CH-2	Date: July 09, 2019 Rev. Date: July 09, 2019 Form No.: 201.30-EG1 Dwg. Lev.: 312 Dwg. Scale: NTS	YORK® A JOHNSON CONTROLS COMPANY

YORKworks Version:

BALTIMORE AIRCOIL COMPANY

QUOTE

EMERSON-SWAN, INC
POST OFFICE BOX 783 300 POND STREET Randolph, MA 02368 United States

Contact: Joshua Williams
Email: JOSHWILLIAMS@EMERSONSWAN.COM
Phone: 781/986-2555 Fax:

BAC Quote #: Q190554111
Project: SPRAGUE ELEMENTARY REP. U013088301
Date: 6/11/2019
Expiration Date: Quote expires 30 days from date issued

TO
BAC UNIT QUOTE
C/O TOWN OF WELLESLEY
HVAC CONTROLS
STEVEN HOFFMAN
SHoffman@Wellesley.MA.Gov

We are pleased to provide you with the following quote.

SHIPPING METHOD F.O.B. FACTORY	LEAD TIME	PAYMENT TERMS
Bestway Freight Included		Due in 30 Days

#	QTY	PRODUCT ID	DESCRIPTION	TOTAL $
1	1	VTL-272-P	Model VTL-272-P Cooling Tower Unit	94,000.00
			TOTAL	$94,000.00

The quoted unit is Baltibond Coated to match the existing tower. See pricing adds & deducts below.

BAC will do its best to meet or improve the scheduled ship date. However, circumstances beyond our control may cause this ship date to change. In the event that it does change, BAC will not be held liable for any damages that may occur. BAC's standard "Terms and Conditions of Sale" apply to this order and may be viewed at www.BaltimoreAircoil.com/terms.

Notes:

1. Prices are quoted in USD currency.
2. The Quote number is required to place an order.
3. A Purchase Order (made out to Baltimore Aircoil Company) with Ship To Address, Bill To Address, and Signature must be sent to the above location.
4. Sales Tax will be added to the final invoice -- if the project is tax exempt, a Certificate will be required.

THANK YOU FOR YOUR BUSINESS!

ADD PRICING:

ADD $12,000.00 to add 304 SST Water Contact Cold Water basin
ADD $5,000.00 for hot dipped Galvy vibration isolation rails

DEDUCT PRICING:

DEDUCT $6,000.00 to go from Baltibond Coated Drift Eliminators to PVC Drift Eliminators

BALTIMORE AIRCOIL COMPANY

QUOTE

TO BAC UNIT QUOTE

BAC Quote # Q190554111
Project: SPRAGUE ELEMENTARY REP.
Date: U013088301
6/11/2019

Quote Line Number Q19055411101

Quantity: 1 Model VTL-272-P/X COOLING TOWER

Certified Capacity: 780.00 USGPM of water from 95.00°F to 85.00°F at 78.00°F entering air wet bulb and 6.78 PSIG of total (static lift + spray) pump head from the unit base.

Fan Motor(s): One (1) 40 HP fan motor(s): Totally Enclosed, Fan Cooled (TEFC),
1 Speed/1 Winding - Premium Efficiency (Inverter Duty), suitable for 200 volt, 3 phase,
60 hertz electrical service and Space Heater.
Drives are based on 0 inches ESP.

NOTE: Inverter Duty fan motors, furnished in accordance with NEMA Standard Mg.1 -- Part 31, are required for applications using variable frequency drives for fan motor control.

Equipment Summary

- Forced Draft, Counterflow Cooling Tower
- Quality Assurance - ISO 9001 Compliant
- Unit Energy Efficiency per ASHRAE Standard 90.1-2016
- Steel Panels and Structural Members are Constructed of Galvanized Steel Furnished with the BALTIBOND® Corrosion Protection System
- Galvanized Steel Fan Wheel(s) Protected with the Thermosetting Hybrid Polymer
- Non-Corroding PVC Film Fill Material with a Flame Spread Rating of 5
- Galvanized Steel Upper Drift Eliminators protected with the BALTIBOND® Corrosion Protection System and PVC Lower Drift Eliminators
- Standard Unit Anchorage
- End Outlet Pump Suction Connection
- Mechanical Float Valve Assembly
- Electric Immersion Heater(s) Sized to Maintain +40°F water at a 0°F Ambient with Electrical Requirements Matching Fan Motor(s)
- Copper Heater Elements

- Electric Immersion Heater Controls
- Extended Bearing Lubrication Lines
- Galvanized Intake Sound Attenuators Protected with the Thermosetting Hybrid Polymer

Equipment Details - All Information is Per Unit

Unit Type:

This unit will be a factory fabricated, forced draft, conterflow cooling tower with vertical discharge.

Quality Assurance:

Each unit will be manufactured under closely-controlled conditions using standardized parts to ensure each unit is built precisely to the same high-quality design and construction standards. The design, manufacture, and business processes of Baltimore Aircoil Company are ISO 9001:2015 compliant.

Unit Efficiency:

The unit(s) will comply with the energy efficiency requirements established by ASHRAE Standard 90.1-2016.

Materials of Construction:

Structural members, hot and cold water basins, fan deck, and fan cylinder can be furnished with the BALTIBOND® Corrosion Protection System. This system extends the equipment life and provides a cost effective solution for installations that may require additional protection beyond galvanized equipment due to uncertain or poor water quality, environmental considerations, or equipment location. The BALTIBOND® Corrosion Protection System is the best and most cost-effective combination of materials and methods found for providing durable, long-life evaporative cooling equipment. The five-year warranty provided on all BAC evaporative cooling equipment is the most comprehensive fan motor and mechanical equipment warranty available in the industry. Included in the five-year warranty are the mechanical equipment support, fan(s), fan shaft(s), bearings, sheaves, and fan motor(s).

Fan Wheels:

The centrifugal fan wheels will be constructed of galvanized steel protected with the Thermosetting Hybrid Polymer.

Wet Deck Material:

The patented BAC Wet Deck and eliminators used in the unit have been engineered to provide a maximum air/water contact and low air pressure drop to ensure efficient heat transfer with minimum fan power requirements. The wet deck surface and eliminators are constructed from serpentine Polyvinyl Chloride (PVC). The wet deck surface is impervious to rot, decay, fungus or biological attack and compliant with ASTM Standard E-84 Class A. The eliminators are designed to effectively strip entrained moisture from the leaving airstream.

Drift Eliminators:

Upper set of Drift Eliminators will be constructed of G-235 hot-dipped galvanized steel protected with the BALTIBOND Corrosion Protection System. Lower set of Drift Eliminators will be constructed of polyvinyl chloride (PVC) and will be removable in easily handled sections. They will impart three distinct changes in air direction to effectively strip entrained moisture from the leaving airstream with minimum air resistance.

Unit Anchorage:

When supported as recommended, the unit has anchorage to resist windloads up to 30 psf (146.6 kg/m^2) acting on the full vertical projected area with 16 psf (78.1 kg/m^2) acting simultaneously on the full horizontal projected area or seismic forces of 112% of the operating weight acting in the horizontal direction, and 14% of the operating weight acting in the vertical direction applied at the center of gravity.

Water Outlet(s):

The water outlet connection is on the end of the unit to facilitate connection to field piping. Please see the submittal package for the connection type, size and location. Additionally, a large area lift out strainer screen with anti-vortexing hood is included to prevent air entrainment.

Basin Water Level Control:

Basin water level control assemblies will consist of unsinkable polystyrene-filled floats, easily adjustable linkages, and corrosion resistant make-up valves.

Basin Heater(s):

Units exposed to below freezing ambient temperatures require protection to prevent freezing of the basin water when the unit is idle. The heater(s) have been selected to maintain +40°F basin water temperatures offering a simple and inexpensive way of providing such protection. The electric immersion heater(s) is shipped separately in the cold water basin. Some field wiring is required.

Heater Element Material of Construction:

The unit is supplied with copper heater elements.

Basin Heater Control:

The heaters are installed in the basin and are controlled by a remote thermostat with the sensing bulb in the basin. A low-water cutoff switch prevents heater operation unless the heater elements are fully submerged. Some field wiring is required.

Extended Lube Line(s):

Bearing lubrication lines will be extended from each bearing to grease fittings located on the face of the unit for ease of access.

Air Intake Option:

Sound attenuators will be provided on the air intake. The attenuators will consist of fiberglass acoustical baffles encased in galvanized steel which is protected with a Thermosetting Hybrid Polymer. This option also includes lubrication fittings extended to outside of fan section.

Unit Overview

Chiller Model	CGAM
Unit Nominal Tonnage	130 tons
Refrigeration Capacity	126.5 tons
Cooling Efficiency	10.31 EER (Btu/W-h)
IPLV.IP	16.08 EER (Btu/W-h)
NPLV.IP	16.30 EER (Btu/W-h)
Elevation	0.000 ft
Unit Frequency	60. hertz
Unit Voltage	208.volt 3 phases
Refrigerant Type	R410A
Number of compressor	6
Number of circuits	2
Number of capacity steps	6
Agency Listing	UL/CUL

Evaporator Information

Evaporator Application					
Std cooling					
Fluid Temperatures		**Flow Rate**			
Evaporator Leaving	45.00 F	**Design Flow**	302.6 gpm	**Freeze protection**	With freeze protection
Evaporator Entering	54.99 F	**Fluid Pressure Drop**		**Fouling factor**	0.0001000 hr-sq ft-deg F/ Btu
Fluid Properties		**Total PD evap+strainer**	21.5 ft H2O	**Flow switch set point**	Flow switch set point 60 cm/sec
Fluid Type	Water	**Design Evap PD**	14.9 ft H2O		
Freeze Point	32.00 F			**Water connection size**	4.000 in

Condenser Information

Unit Application	Wide ambient	**Fin Material**	Lanced aluminum		
Ambient Air Temp.	95.0 F	**Total airflow**	89938 cfm	**Number of Fans**	10

Unit Electrical

Unit					RLA	LRA
Compressor Starter	Across the line	**Incoming Power Line Conn. Type**	Single point	**Compressor A**	73.90 A	485.00 A
Total Power	147.2 kW	**Short Circuit Current Option**	Default	**Compressor B**	73.90 A	485.00 A
Compressor Power	135.3 kW	**Short Circuit Current Rating**	5000.00 A	**Compressor C**	91.30 A	560.00 A
Fan Power	11.70 kW	**Single Point Power MCA**	569.30 A	**Compressor D**	91.30 A	560.00 A
Total Fan FLA	64.20 A	**Single Point Power MOP**	600.00 A	**Compressor E**	73.90 A	485.00 A
				Compressor F	73.90 A	485.00 A

Physical Information

Dimensions		Weights			Refrigerant Charge	Oil Charge
Length	201.900 in	**Operating Weight**	7899.8 lb	**Circuit 1**	112.0 lb	5.81 gal
Width	88.900 in	**Shipping Weight**	7752.7 lb	**Circuit 2**	112.0 lb	5.81 gal
Height	92.300 in					

Unit Acoustics (A-Weighted)

A-Weighted	Sound Power	Sound Pressure*	Unit Sound Package
100%	93 dBA	65 dBA	Comprehensive package

Note: In Accordance with AHRI 370

*Note: at 30 feet in free field

Warranty

Standard Warranty

Information for LEED Projects

ASHRAE 90.1/CSA compliance	ASHRAE all to 2016
Rated refrigeration capacity (AHRI)	124.4 tons
IPLV.IP	16.08 EER (Btu/W-h)
Cooling Efficiency	10.31 EER (Btu/W-h)
Compress Power	135.3 kW
Fan Power	11.70 kW
Refrigerant (R410A) - ckt 1	112.0 lb
Refrigerant (R410A) - ckt 2	112.0 lb

Certified in accordance with the AHRI Air-Cooled Water-Chilling Packages Certification Program, which is based on AHRI Standard 550/590 (I-P) and AHRI Standard 551/591 (SI). Certified units may be found in the AHRI Directory at www.ahridirectory.org.

TOPSS Version Number: 226
Data Generation Date: 7/25/2019

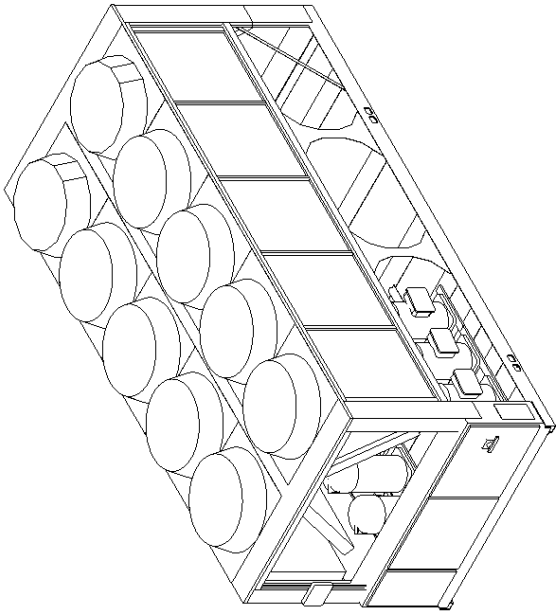

ISOMETRIC VIEW

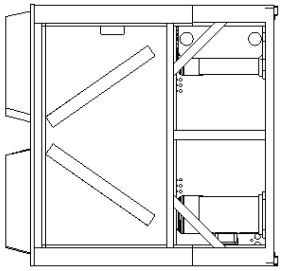

BACK VIEW

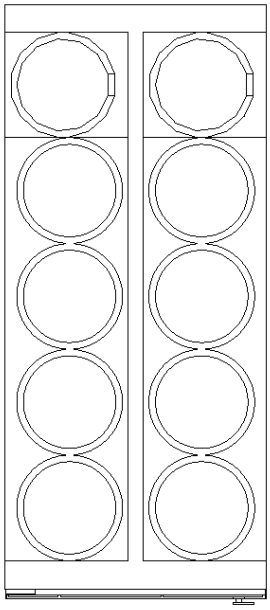

TOP VIEW

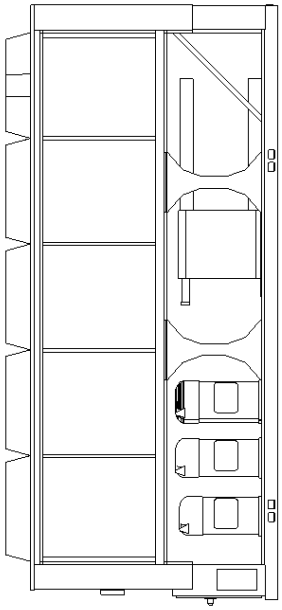

RIGHT SIDE VIEW

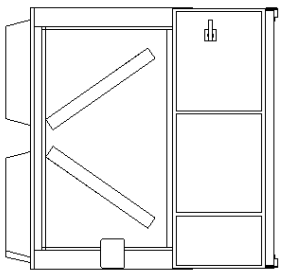

FRONT VIEW

INLET/OUTLET WATER CONNECTION SIZE 4" (100mm)

BRAZE PLATE WATER VOLUME/STORAGE 12.3 GAL (46.7 LITERS)

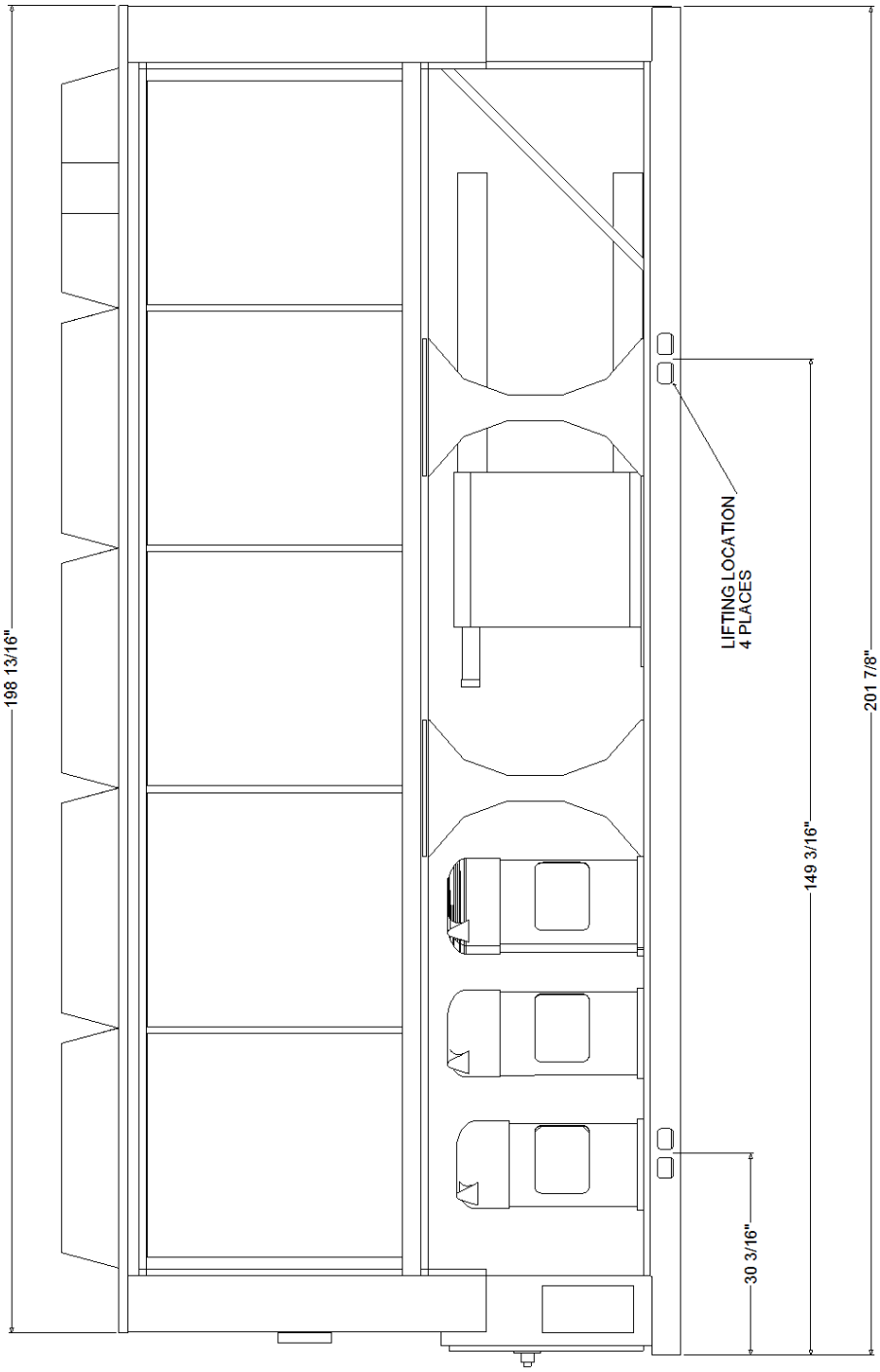

RIGHT SIDE VIEW

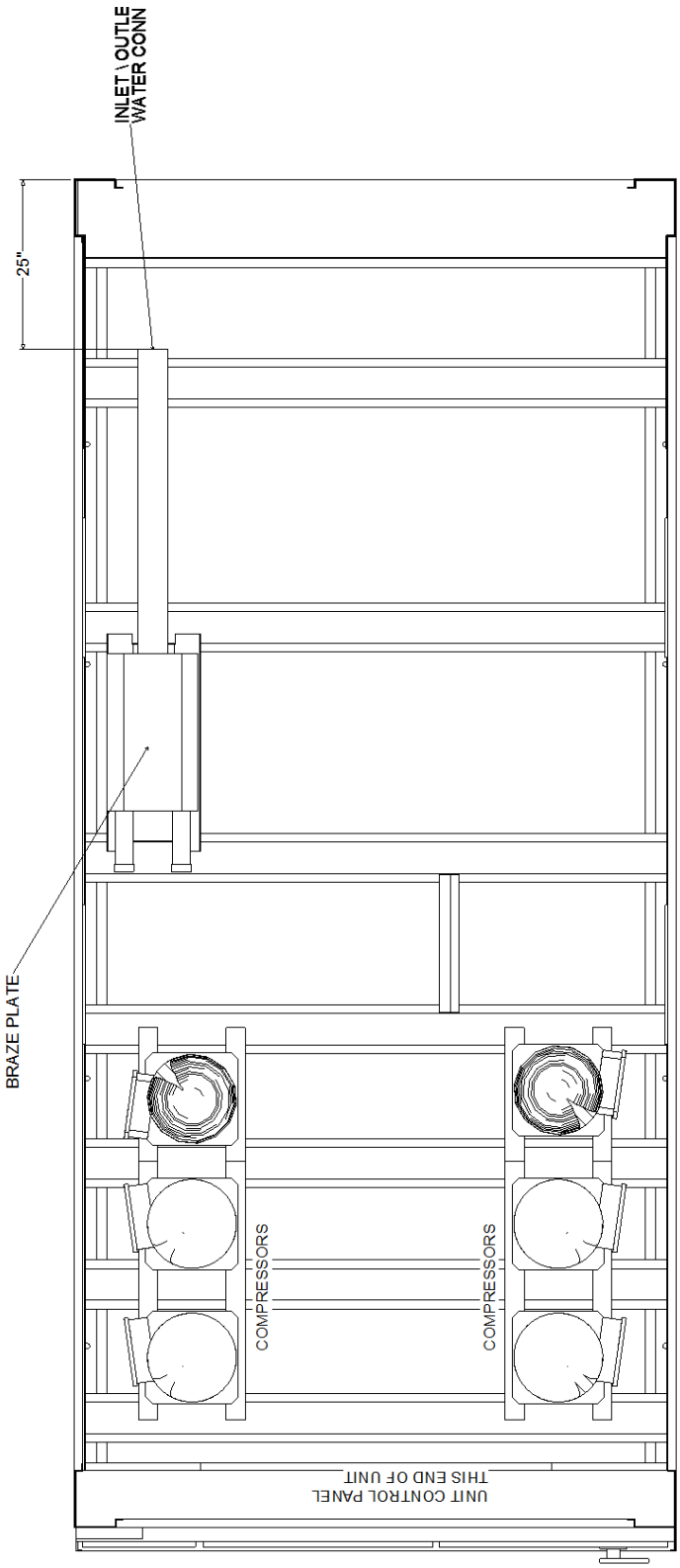

TOP VIEW

CONDENSER, CONTROL PANEL AND
VSD (WHEN ORDERED) REMOVED FOR CLARITY

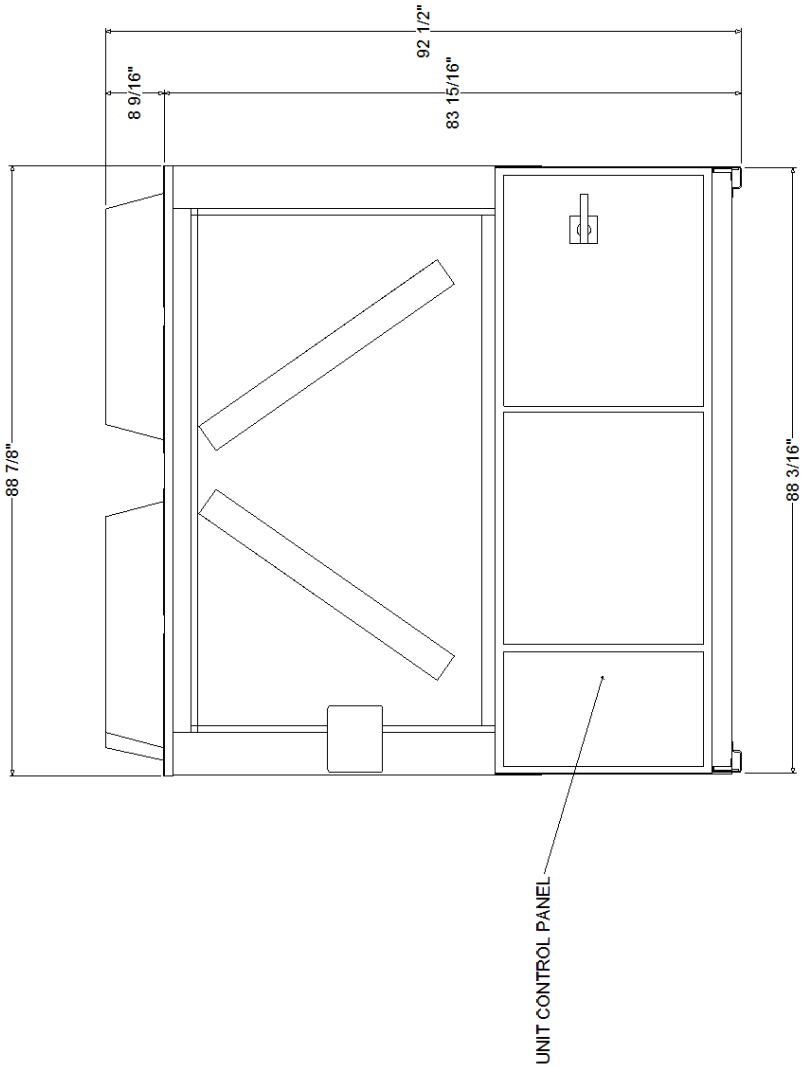

FRONT VIEW

LOUVERED PANELS NOT SHOWN
OVER CONTROL PANEL FOR CLARITY

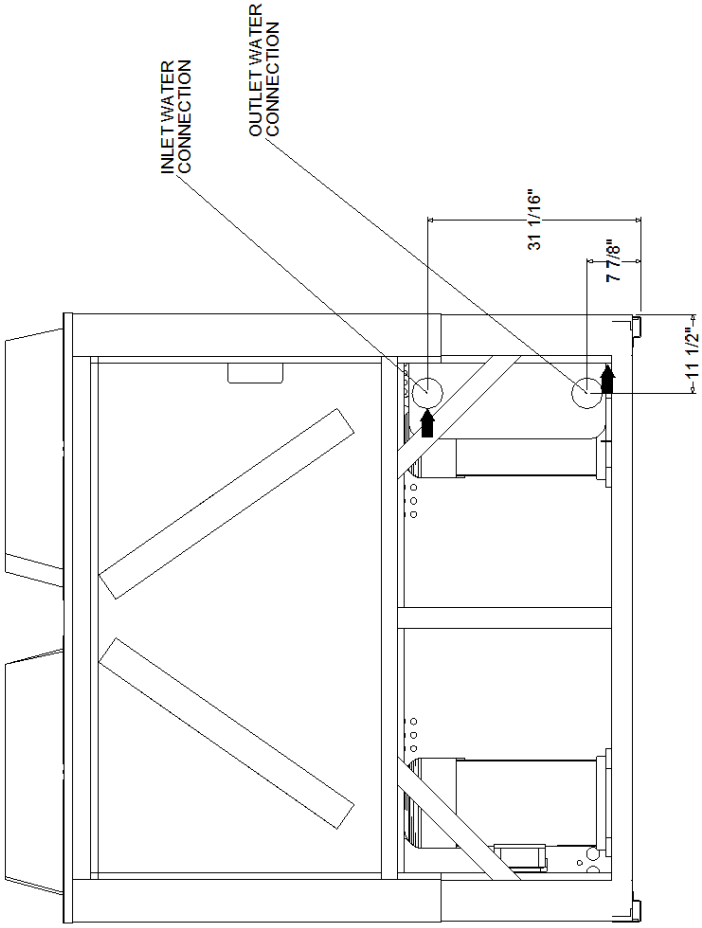
INLET WATER CONNECTION
OUTLET WATER CONNECTION
31 1/16"
7 7/8"
11 1/2"

BACK VIEW

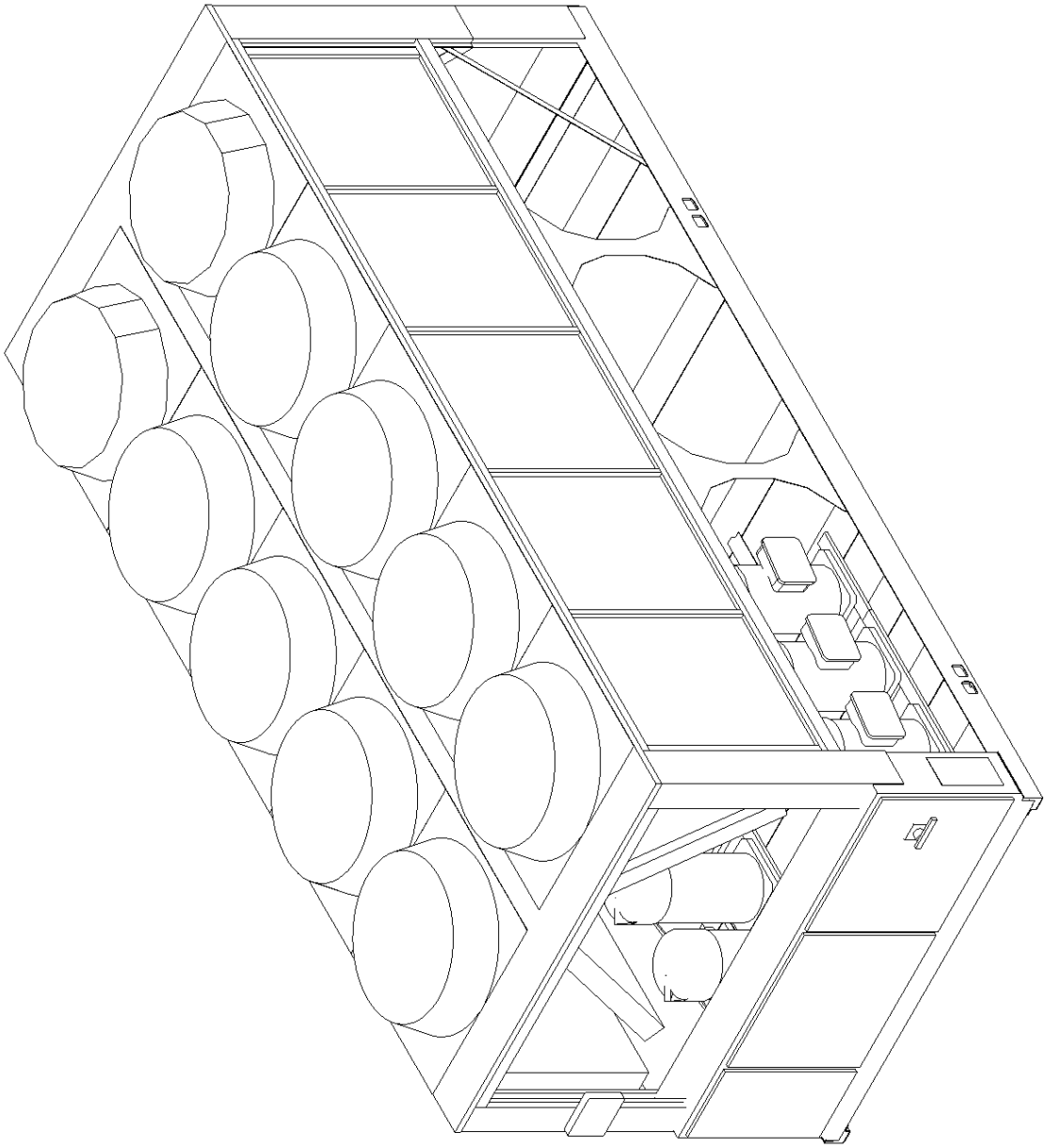

ISOMETRIC VIEW

LOUVERED PANELS NOT SHOWN
OVER CONTROL PANEL FOR CLARITY

UNIT CENTER OF GRAVITY

LIFTING WEIGHTS				SHIPPING WEIGHT
W1	W2	W3	W4	7,752.7
1,953.8	2,118.4	1,719.2	1,864.1	

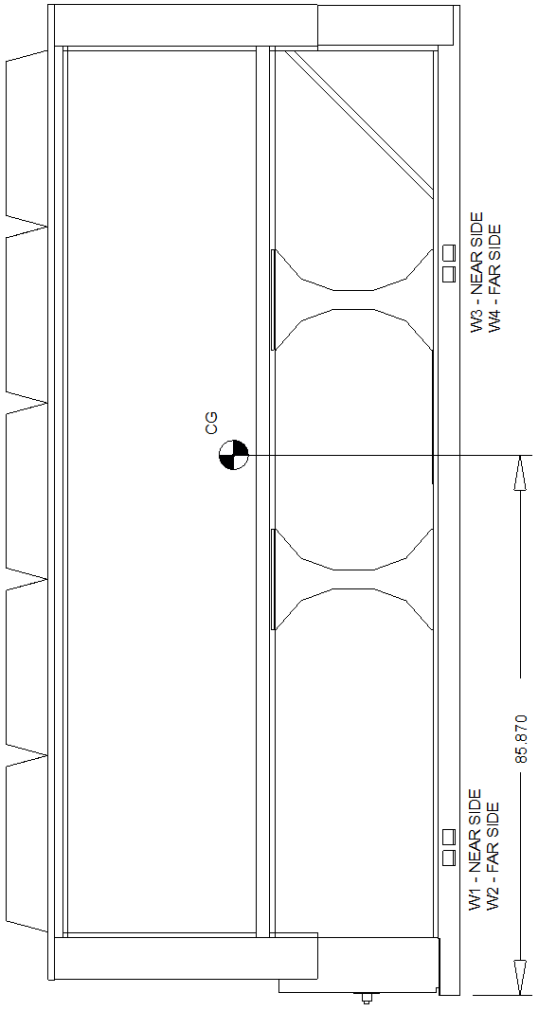

SIDE VIEW

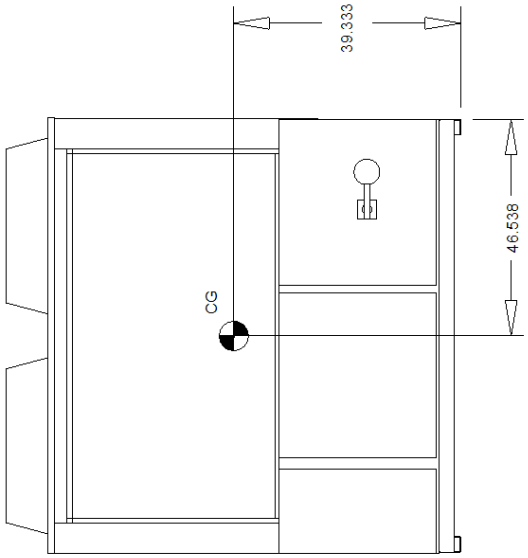

FRONT VIEW
CONTROL PANEL END

UNIT CLEARANCE

NO OBSTRUCTIONS ABOVE THE CONDENSER

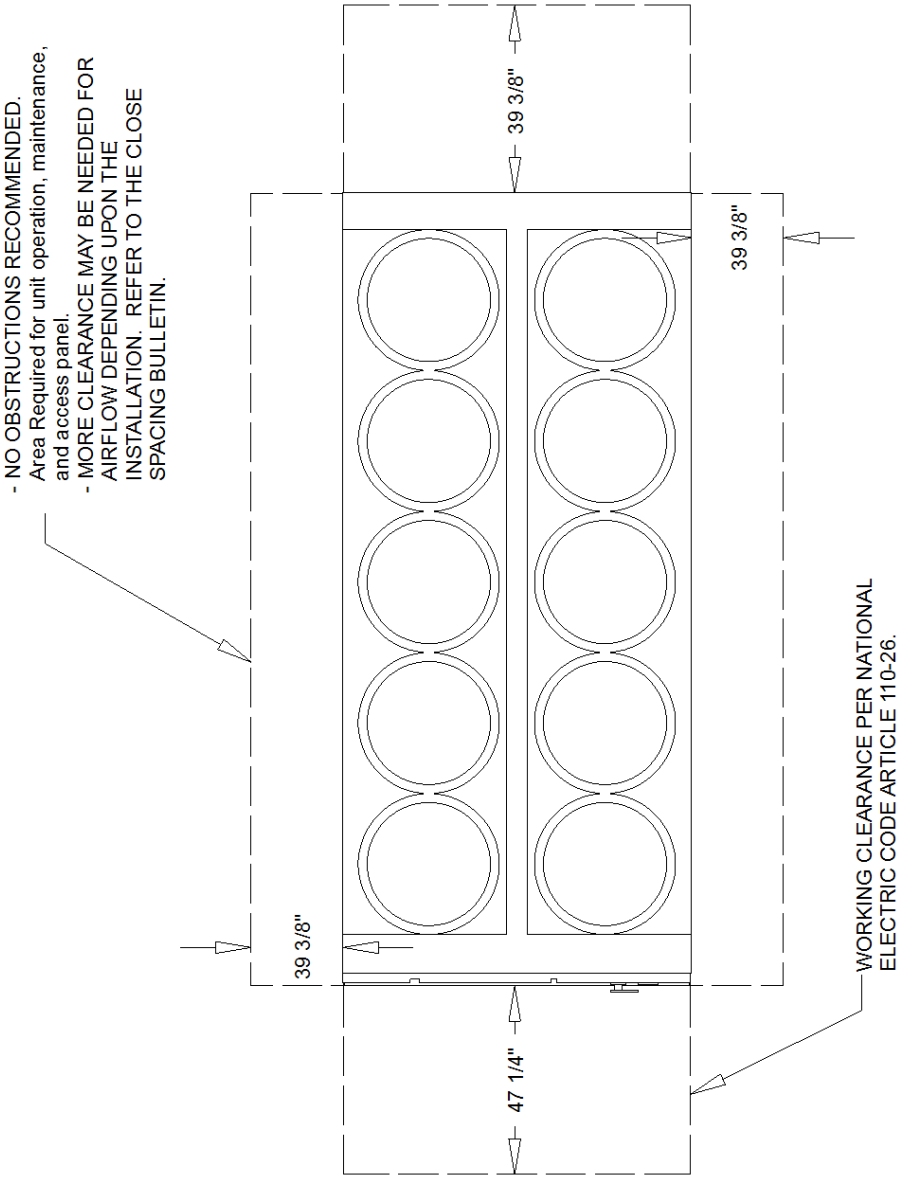

TOP VIEW

UNIT RIGGING

LIFTING A UNIT WITH EQUAL LENGTH STRAPS WILL NOT PRODUCE A LEVEL UNIT DURING THE LIFT BECAUSE THE CG WILL NOT BE AT THE MIDPOINT BETWEEN THE BASE LIFTING HOLES. THE FOLLOWING ADJUSTMENTS MUST BE MADE TO PRODUCE A LEVEL LIFT:

- SINGLE SPREADER BAR LIFTING METHOD
IF THE UNIT CG IS CLOSER TO THE CONTROL PANEL, THE STRAPS ON THE CONTROL PANEL SIDE OF THE SPREADER BAR MUST BE ADJUSTED TO BE SHORTER THAN THOSE ON THE OPPOSITE SIDE OF THE SPREADER BAR, ALLOWING THE SPREADER BAR TO MOVE TOWARD THE CONTROL PANEL AND OVER THE UNIT CG. SEVERAL ADJUSTMENTS OF THE STRAP LENGTH MAY BE REQUIRED TO PRODUCE A LEVEL UNIT DURING LIFT.

- H-TYPE SPREADER BAR LIFTING METHOD
IF THE STRAPS FROM THE H BAR TO THE UNIT BASE ARE THE SAME LENGTH, THE CRANE LIFTING POINT ON THE CENTER WEB OF THE H BAR MUST BE ADJUSTED TO PRODUCE A LEVEL UNIT LIFT.

⚠ WARNING

IMPROPER LIFTING AND MOVING!

USE SPREADER BAR AS SHOWN IN DIAGRAM. REFER TO INSTALLATION MANUAL OR NAMEPLATE FOR UNIT WEIGHT. REFER TO INSTALLATION INSTRUCTIONS LOCATED INSIDE CONTROL PANEL FOR FURTHER RIGGING INFORMATION.

OTHER LIFTING ARRANGEMENTS COULD RESULT IN DEATH, SERIOUS INJURY OR EQUIPMENT DAMAGE.

DO NOT ALLOW LIFTING STRAPS TO CONTACT UNIT DURING LIFT!

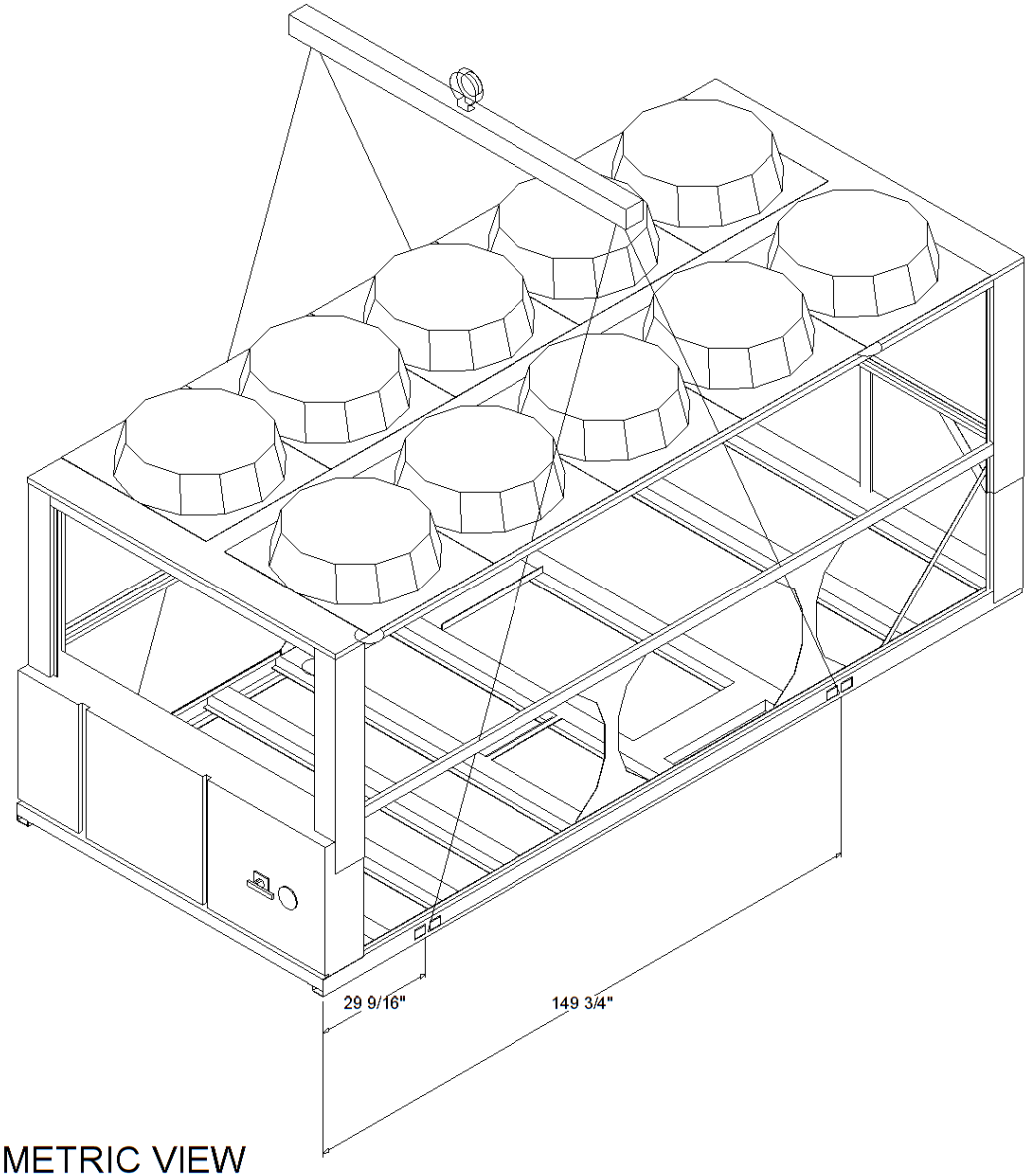

ISOMETRIC VIEW

SHORT CIRCUIT RATING	5kA

ISOMETRIC VIEW

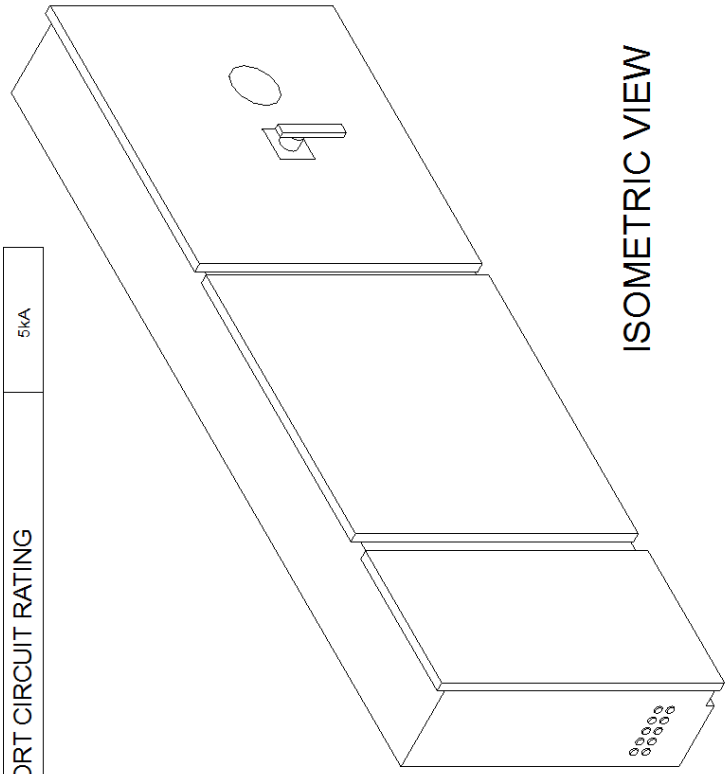

RIGHT END VIEW

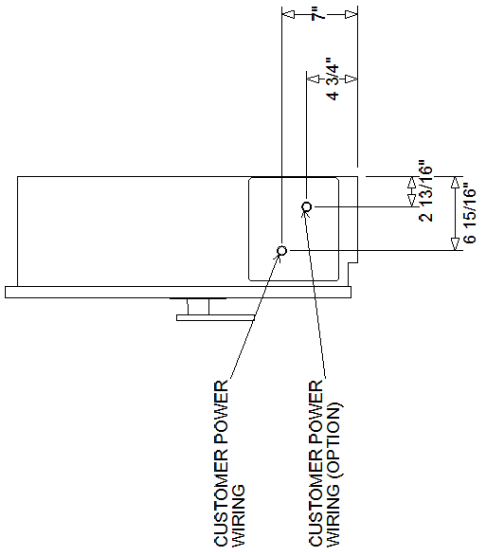

CUSTOMER WIRE SELECTION TABLE

POWER WIRE CONNECTION TO CIRCUIT BREAKER (1Q1)

UNIT SIZE	UNIT EFF	VOLTAGE	CIR 1 & 2 (SINGLE POINT POWER) LUG WIRE SIZE RANGE (PER PHASE)
130	HIGH	200	(2 MAX Conductors per phase) 2/0-500MCM

LEFT END VIEW

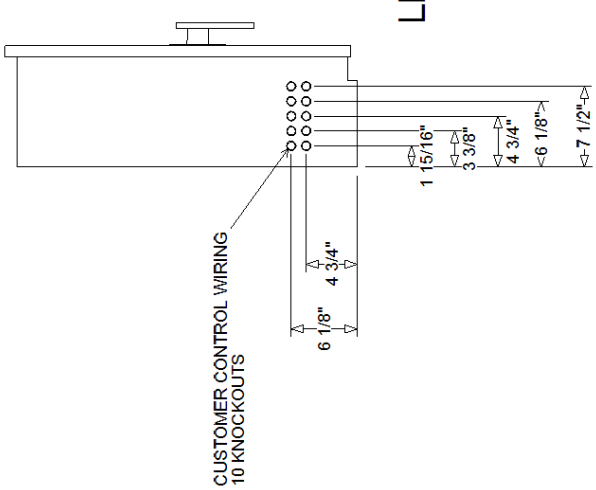

FRONT VIEW

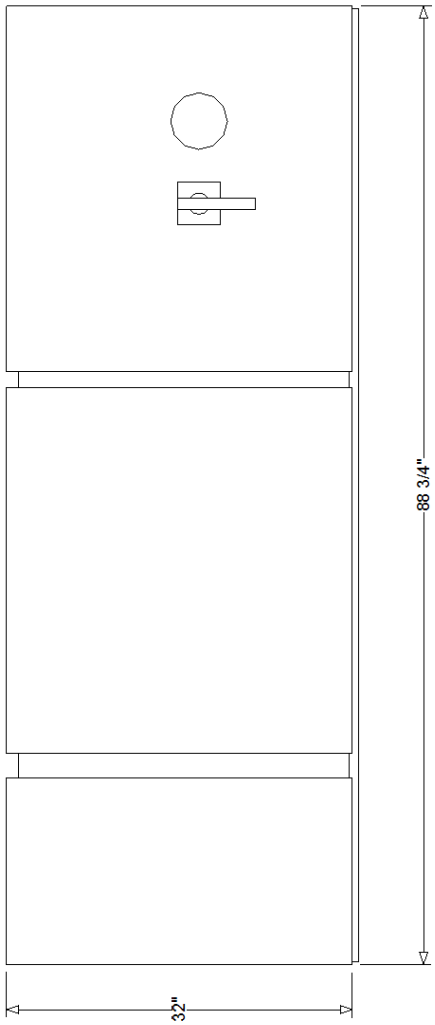

UNIT SIZE	MOUNTING LOCATIONS & POINT LOAD WEIGHTS								TOTAL OPERATING WEIGHT
	1	2	3	4	5	6	7	8	
130	1,283.9	1,272.3	909.8	1,229.0	860.6	852.1	569.0	826.0	7,899.8

MOUNTING HOLE DIAMETER 3/4"

CONTROL PANEL

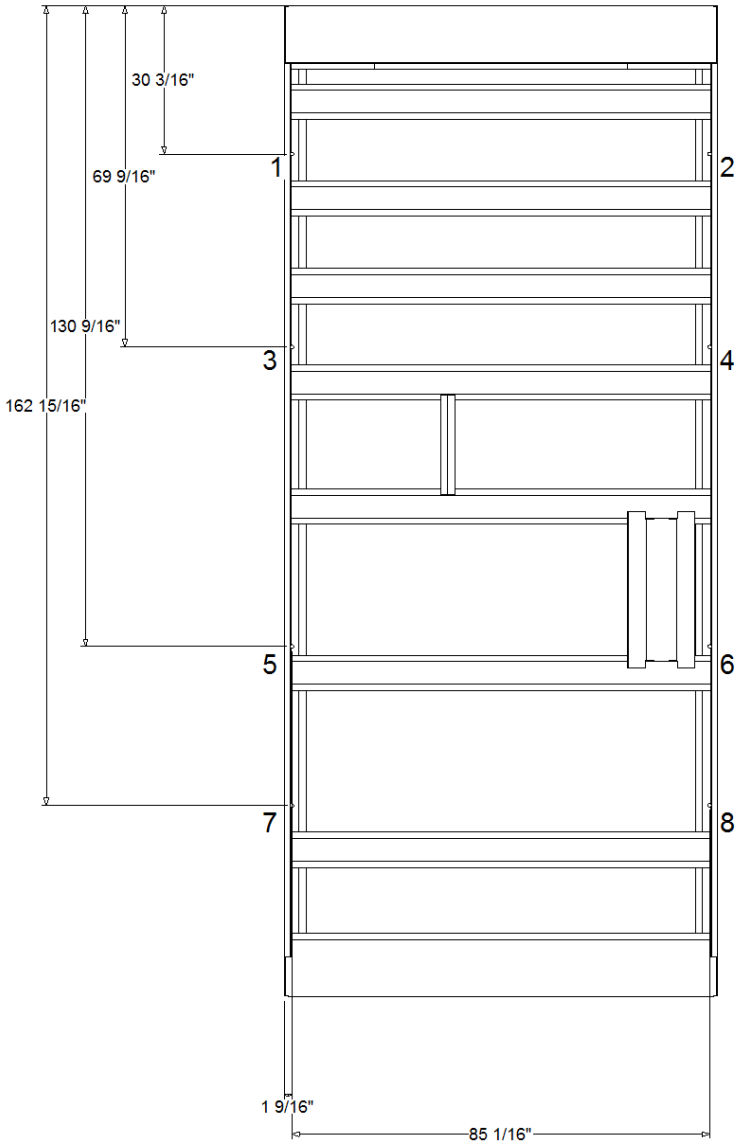

TOP VIEW

DIMENSIONS ARE REFERENCED FROM
THE END AND SIDE OF THE UNIT BASE

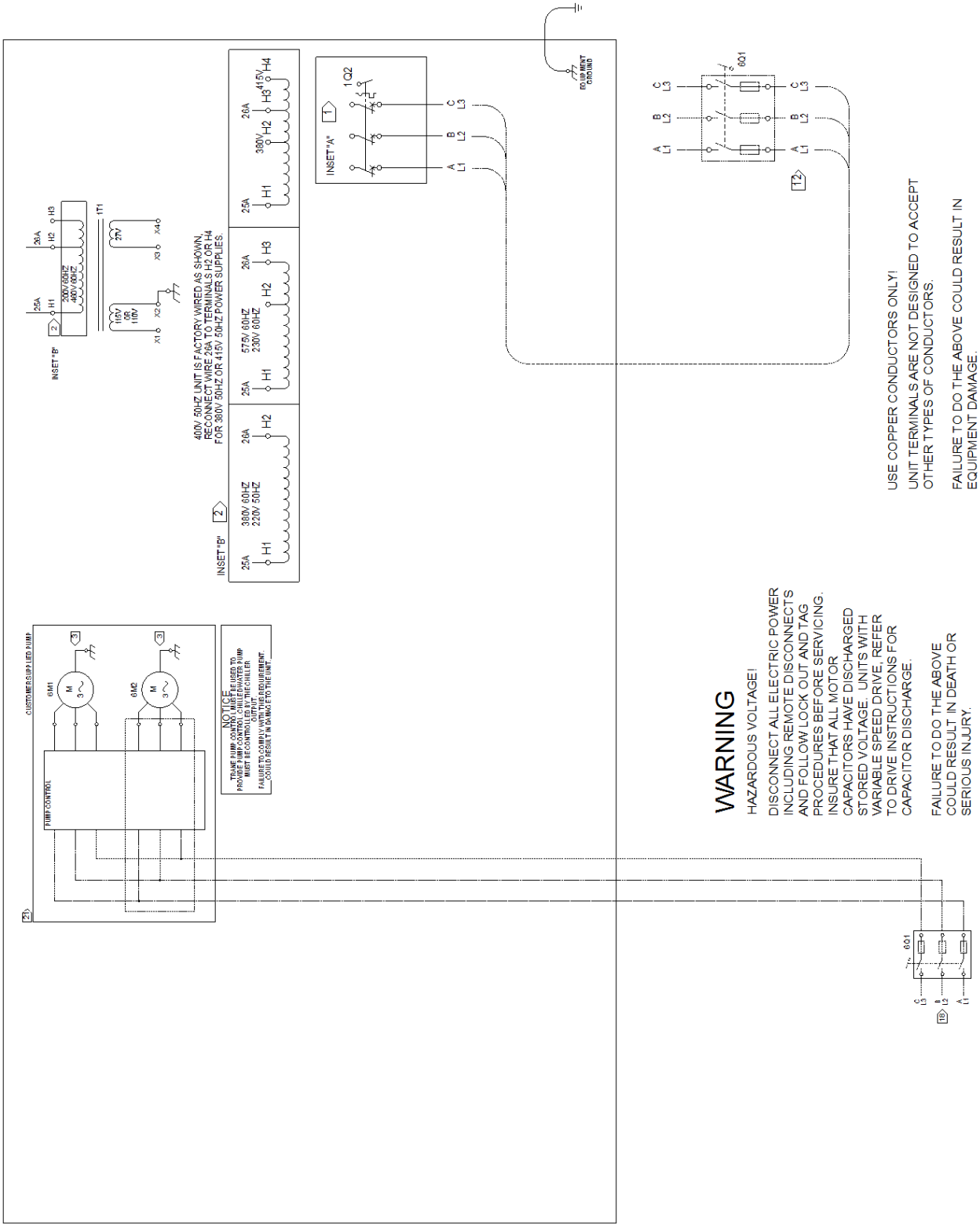

CONTROL PANEL

PAGE 1 OF 2

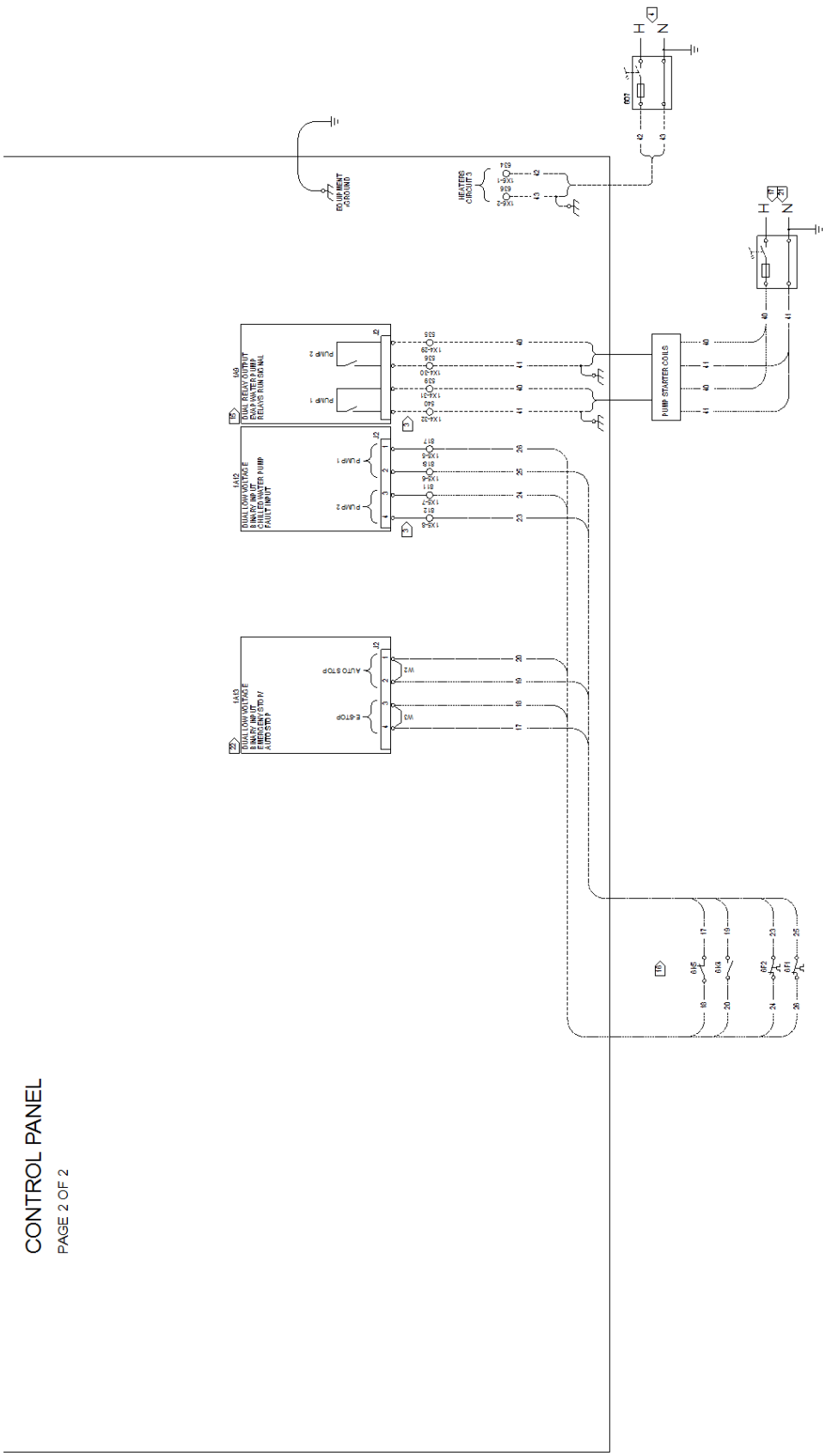

USE COPPER CONDUCTORS ONLY!

UNIT TERMINALS ARE NOT DESIGNED TO ACCEPT OTHER TYPES OF CONDUCTORS.

FAILURE TO DO THE ABOVE COULD RESULT IN EQUIPMENT DAMAGE.

WARNING

HAZARDOUS VOLTAGE!

DISCONNECT ALL ELECTRIC POWER INCLUDING REMOTE DISCONNECTS AND FOLLOW LOCK OUT AND TAG PROCEDURES BEFORE SERVICING. INSURE THAT ALL MOTOR CAPACITORS HAVE DISCHARGED STORED VOLTAGE. UNITS WITH VARIABLE SPEED DRIVE, REFER TO DRIVE INSTRUCTIONS FOR CAPACITOR DISCHARGE.

FAILURE TO DO THE ABOVE COULD RESULT IN DEATH OR SERIOUS INJURY.

1 SINGLE SOURCE POWER IS PROVIDED AS STANDARD ON THESE PRODUCTS, FIELD CONNECTIONS ARE MADE TO 1X1, OR 1Q2.

2 FOR VOLTAGES 200V/60HZ, 220V/50HZ, 380V/60HZ, 460V/60HZ, WIRE 26A SHALL BE CONNECTED TO H2. FOR VOLTAGES 230V/60HZ & 575V/60HZ, WIRE 26A SHALL BE CONNECT TO H3. 400V/50HZ UNIT IS FACTORY WIRED WITH 26A CONNECTED TO H3 - RECONNECT WIRE 26A TO H2 FOR 380V/50HZ, OR H4 FOR 415V/50HZ. H4 IS ONLY AVAILABLE WITH 400V/50HZ PANELS.

3 FIELD CONNECTIONS ARE ONLY MADE IN A CUSTOMER PROVIDED PUMP (PTYP=NONE). THESE CONNECTIONS WILL BE MADE BY THE FACTORY WHEN THE PUMP IS PROVIDED BY THE FACTORY (PTYP=DHHP).

4 CUSTOMER SUPPLIED POWER 115/60/1 OR 220/50/1 TO POWER RELAYS. MAX. FUSE SIZE IS 20 AMPS. GROUND ALL CUSTOMER SUPPLIED POWER SUPPLIES AS REQUIRED BY APPLICABLE CODES. GREEN GROUND SCREWS ARE PROVIDED IN UNIT CONTROL PANEL.

5 WIRED TO NEXT UNIT. 22 AWG SHIELDED COMMUNICATION WIRE EQUIVALENT TO HELIX LF22P0014216 RECOMMENDED. THE SUM TOTAL OF ALL INTERCONNECTED CABLE SEGMENTS NOT TO EXCEED 4500 FEET. CONNECTION TOPOLOGY SHOULD BE DAISY CHAIN. REFER TO BUILDING AUTOMATION SYSTEM (BAS) COMMUNICATION INSTALLATION LITERATURE FOR END OF LINE TERMINATION RESISTOR REQUIREMENTS.

6 WIRED TO TRACER OR OTHER TRANE REMOTE DEVICE. 22 AWG SHIELDED COMMUNICATION WIRE EQUIVALENT TO HELIX LF22P0014216 RECOMMENDED. THE SUM TOTAL OF ALL INTERCONNECTED CABLE SEGMENTS NOT TO EXCEED 4500 FEET. CONNECTION TOPOLOGY SHOULD BE DAISY CHAIN. REFER TO BUILDING AUTOMATION SYSTEM (BAS) COMMUNICATION INSTALLATION LITERATURE FOR END OF LINE TERMINATION RESISTOR REQUIREMENTS.

7 WIRED TO CUSTOMER CHILLED WATER SET POINT 2-10V OR 4-20mA.

8 WIRED TO CUSTOMER EXTERNAL DEMAND LIMIT 2-10V OR 4-20mA.

9 WIRED TO CUSTOMER 2-10V OR 4-20mA % CAPACITY ANNUNICIATOR.

10 WIRED TO TRACER OR OTHER REMOTE DEVICE.

11. REFER TO CGAM ELECTRICAL SCHEMATIC FOR SPECIFIC ELECTRICAL CONNECTION INFORMATION AND NOTES PERTAINING TO WIRING INSTALLATION.

12 ALL UNIT POWER WIRING MUST BE 600 VOLT COPPER CONDUCTORS ONLY AND HAVE A MINIMUM TEMPERATURE INSULATION RATING OF 90 DEGREE C. REFER TO UNIT NAMEPLATE FOR MINIMUM CIRCUIT AMPACITY AND MAXIMUM OVERCURRENT PROTECTION DEVICE. PROVIDE AN EQUIPMENT GROUND IN ACCORDANCE WITH APPLICABLE ELECTRIC CODES. REFER TO WIRE RANGE TABLE FOR LUG SIZES.

13. ALL FIELD WIRING MUST BE IN ACCORDANCE WITH NATIONAL ELECTRIC CODE AND LOCAL REQUIREMENTS.

14. ALL CUSTOMER CONTROL CIRCUIT WIRING MUST BE COPPER CONDUCTORS ONLY AND HAVE A MINIMUM INSULATION RATING OF 300 VOLTS. EXCEPT AS NOTED, ALL CUSTOMER WIRING CONNECTIONS ARE MADE TO CIRCUIT BOARD MOUNTED BOX LUGS WITH A WIRE RANGE OF 14 TO 18 AWG OR DIN RAIL MOUNTED SPRING FORCE TERMINALS.

15 UNIT PROVIDED DRY CONTACTS FOR THE CONDENSER/CHILLED WATER PUMP CONTROL. RELAYS ARE RATED FOR 7.2 AMPS RESISTIVE, 2.88 AMPS PILOT DUTY, OR $\frac{1}{3}$ HP, 7.2 FLA AT 120 VOLTS 60 HZ, CONTACTS ARE RATED FOR 5 AMPS GENERAL PURPOSE DUTY 240 VOLTS.

16 CUSTOMER SUPPLIED CONTACTS FOR ALL LOW VOLTAGE CONNECTIONS MUST BE COMPATABLE WITH DRY CIRCUIT 24 VOLTS DC FOR A 12 mA RESISTIVE LOAD. SILVER OR GOLD PLATED CONTACTS RECOMMENDED.

17 FIELD CONNECTIONS ARE ONLY MADE IN A CUSTOMER PROVIDED PUMP. THESE CONNECTIONS WILL BE MADE BY THE FACTORY WHEN THE PUMP IS PROVIDED BY THE FACTORY. CUSTOMER SUPPLIED POWER 115V, 60Hz, 1PH.

18 CUSTOMER SUPPLIED 3 PHASE POWER.

19 OPTIONAL FIELD ASSIGNED PROGRAMMABLE RELAYS (STAT=PRLY). CLASS 1 FIELD WIRED MODULE, RELAY AT 120V: 7.2A RESISTIVE 2.88A PILOT DUTY, 1/2 HP 7.2FLA; AT 240VAC: 5 AMPS GENERAL PURPOSE.

20 WIRED TO CUSTOMER 0-10 VDC PUMP SPEED SIGNAL.

21 WHEN FACTORY PROVIDED PUMP IS NOT SELECTED. CUSTOMER MUST SUPPLY SUITABLE PUMP SYSTEM. REFER TO PUMP MANUFACTURER FOR WIRING REQUIREMENTS.

22 THE CONTACTS FOR AUTO STOP AND EMERGENCY STOP SWITCHES ARE JUMPERED AT THE FACTORY BY JUMPERS W2 & W3 TO ENABLE UNIT OPERATION. IF REMOTE CONTROL IS DESIRED, REMOVED THE JUMPERS AND CONNECT TO THE DESIRED CONTROL CIRCUIT.

23 1A15, LCI MODULE USED WHEN (COMM = LCI).

24 1A41, BACNET INTERFACE MODULE USED WHEN (COMM = BCNT).

Validation Period
Product performance, mechanical specifications and submittal data is valid for a period of 4 months from the date of the submittal generation. If 4 months or more has elapsed between submittal generation and equipment release, the product and submittal will need to be verified. It is the purchaser's responsibility to request such verification.

Foundation
Provide rigid, non-warping mounting pads or a concrete foundation of sufficient strength and mass to support the applicable operating weight (i.e. including completed piping, and full operating charges of refrigerant, oil and water). Once in place, the unit must be level within 1/4" across the length of the unit. The Trane Company is not responsible for equipment problems resulting from an improperly designed or constructed foundation.

General
Units are constructed of a galvanized steel frame with galvanized steel panels and access doors. Component surfaces are finished with a powder-coated paint.

Each unit ships with full operating charges of refrigerant and oil.

Compressor and Motor
The unit is equipped with six hermetic, direct-drive, 3600 rpm 60 Hz suction gas-cooled scroll compressors. The simple design has only three major moving parts and a completely enclosed compression chamber which leads to increased efficiency. Overload protection is internal to the compressors. The compressor includes: centrifugal oil pump, oil level sight glass and oil charging valve. Each compressor will have compressor heaters installed and properly sized to minimize the amount of liquid refrigerant present in the oil sump during off cycles.

Unit-Mounted Starter
The control panel is designed per UL 1995. The starter is in an across-the-line configuration, factory-mounted and fully pre-wired to the compressor motor and control panel. Typically, Trane scroll compressors are up to full speed in one second when started across-the-line.

A factory-installed, factory-wired 820 VA control power transformer provides all unit control power (120 Vac secondary) and Trane CH530 module power (24 Vac secondary).

A molded case standard interrupting capacity circuit breaker, factory pre-wired with terminal block power connections and equipped with a lockable external operator handle, is available to disconnect the chiller from main power.

Power Connection
Power connections include main three-phase power and one separate 115V, 20 amp customer provided single phase power connection is required to power the heaters (if used for freeze protection).

Short circuit current rating of 5 kA is provided.

Evaporator
Braze plate evaporator is made of stainless steel with copper as the braze material. It is designed to withstand a refrigerant side working pressure of 430 psig (29.6 bars) and a waterside working pressure of 150 psig (10.5 bars). Evaporator is tested at 1.1 times maximum allowable refrigerant side working pressure and 1.5 times maximum allowable water side working pressure. It has one water pass. A water strainer and a flow switch are factory installed.

Immersion heaters protect the evaporator to an ambient of -20°F (-29°C).

All evaporators have grooved pipe connections.

Note: An additional 115V, 20 amp field provided single phase power connection is required to power the heaters (if used for freeze protection).

Condenser
Air-cooled condenser coils have lanced aluminum fins mechanically bonded to internally-finned copper tubing.

The condenser coil has an integral sub-cooling circuit. The maximum allowable working pressure of the condenser is 650 psig (44.8 bars). Condensers are factory proof tested at 650 psig (44.8 bars).

Direct-drive vertical discharge condenser fans are balanced and individually protected. Three-phase condenser fan motors with permanently lubricated ball bearings and external thermal overload protection are provided.

A variable speed drive on the first fan of each circuit allows the unit to start and operate with ambient temperatures between 0.0 F and 125.0 F.

Refrigerant Circuits
The unit has dual refrigerant circuits. Each refrigerant circuit has Trane scroll compressors piped in parallel with a passive oil management system. A passive oil management system maintains proper oil levels within compressors and has no moving parts. Each refrigerant circuit includes filter drier, electronic expansion valve, liquid line and discharge service valves. Capacity modulation is achieved by turning compressors on and off. The unit has four capacity stages.

Unit Controls
The microprocessor-based control panel is factory-installed and factory-tested. The control system is powered by a pre-wired control power transformer, and will turn on and off compressors to meet the load. Microprocessor-based chilled water reset based on return water is standard. The unit comes with a factory installed flow switch.

The Trane CH530 microprocessor automatically acts to prevent unit shutdown due to abnormal operating conditions associated with low evaporator refrigerant temperature and high condensing temperature. If an abnormal operating condition continues and the protective limit is reached, the machine will shut down.

The panel includes machine protection for the following conditions: low evaporator refrigerant temperature and pressure, high condenser refrigerant pressure, critical sensor or detection circuit faults, lost communication between modules, phase loss, phase reversal, over temperature protection, external and local emergency stop, and loss of evaporator water flow.

When a fault is detected, the control system conducts more than 100 diagnostic checks and displays results. The display will identify the fault, indicate date, time, and operating mode at time of occurrence, and provide type of reset required and a help message.

Data contained in available reports includes: water and air temperatures, refrigerant pressures and temperatures, flow switch status, EXV position, and compressor starts and run-time. All necessary settings and setpoints are programmed into the microprocessor-based controller via the operator interface. The controller is capable of receiving signals simultaneously from a variety of control sources, in any combination, and priority order of control sources can be programmed.

Comprehensive Acoustic Package
Acoustical treatment for compressors is factory installed.

Architectural Louvered Panels
Louvered panels cover the complete condensing coil and service area beneath the condenser.

MULTISTACK

Job Name	Sprague School	Job Number	
Location	Wellesley, MA	Quote Number	QDSWEENEY07252019-1
Engineer	Ken Beck - BLW	Representative	Dan Sweeney
Contractor		Rep Office	Boston

Mechanical Modules
(4) ASP060XC14A2AL1AAASN-410A

Accessory Modules

PERFORMANCE DATA									
Load	Capacity (Tons)	KW	KW/Ton	EER	COP	Flow Rate (GPM)	Leaving ˚F	ΔP(ft H2O)	Ambient˚F
100%	236.9	272.5	1.150	10.43	3.060	633.7	45.00	17.44	95.00
75%	177.7	150.4	0.8463	14.18	4.150	633.7	45.00	17.44	80.00
50%	118.4	77.93	0.6579	18.29	5.360	633.7	45.00	17.44	65.00
25%	59.22	34.45	0.5817	21.04	6.160	633.7	45.00	17.44	55.00

The 25, 50 % points have incorporated a cycling penalty per AHRI 550/590.

With Ambient Relief (per AHRI 550/590)

	kW/Ton	EER	COP
NPLV.IP	0.7167	16.74	4.911

EVAPORATOR DESIGN DATA	(Based on 35% PG)
Entering Temperature ˚F	55.00
Leaving Temperature ˚F	45.00
Design Flow (GPM)	633.7
Pressure Drop (Full Load)	7.549 PSI / 17.44 ft H2O
Minimum Flow	158.4
System Min Flow For Bypass Sizing	237.6
Number Of Passes	1
Fouling Factor (h-ft2-°F/Btu)	.000100
Header Size	8"
Header Connection Type	Grooved Coupling
Header Exchanger Style	Brazed Plate
Number of Compressors (per mod.)	2

CONDENSER DESIGN DATA	Based On Sea Level Elevation
Design Ambient ˚F	95.00
Minimum Ambient ˚F	-20.0
Coil Type	Al/Cu Condenser Coils-No Coating
Fan Qty (per module)	4
Fan Horsepower	2

ELECTRICAL DATA	1	2	3	4
(4) ASP060X	2	2	0	0
MCA	*512	**502		
MOP	700	700		
Voltage	208/60/3			

PHYSICAL DATA	
Length (inches)	336
Width (inches)	72
Height (inches)	88.375
Estimated Dry Weight (lbs)	17700
Estimated Operating Weight (lbs)	19100
Refrigerant Type	R-410A
Refrigerant Charge (lbs)	325 per module

Dimensions are estimated and do not include J-Boxes

CHILLER DATA	
Options	With Ambient Relief (per AHRI 550/590)
Compressor RLA (A) (per compressc	104
Fan FLA (A) (per fan)	7.4
Compressor Description	Scroll
Nominal Capacity (tons per module)	60

*Parallel feeds required.
**Parallel feeds required.

Outside the scope of AHRI Air-Cooled Water-Chilling Packages Certification Program, but is rated in accordance with AHRI Standard 550/590 (I-P) and AHRI Standard 551/591 (SI).
Combined units or modular chiller array rating is outside of the scope of the AHRI Air-Cooled Water-Chilling Packages Certification Program.
Individual unit ratings are subject to the governing documents of the AHRI Certification Program.
Unit contains freeze protection fluids in the evaporator with a leaving chilled fluid temperature above 32°F [0°C] and is certified when rated per the Standard with water.

MEMBER AHRI AIR-CONDITIONING, HEATING, & REFRIGERATION INSTITUTE we make life better™

Job Name	Sprague School - Copy(1)	Job Number	
Location	Wellesley, MA	Quote Number	QDSWEENEY07252019-2
Engineer	Ken Beck - BLW	Representative	Dan Sweeney
Contractor		Rep Office	Boston

AHRI Certified Single Module Run

Mechanical Modules: (1) ASP060XC14A2AL1AAASN-410A

SUMMARY PERFORMANCE DATA

Load	Capacity (Tons)	Total Power (KW)	KW/Ton	EER (Btu/Wh	COP (kW/kW	Flow Rate (GPM)	Leaving ˚F	ΔP (ft H2O)	Ambient ˚F
100%	60.89	69.77	1.146	10.47	3.070	146.0	44.00	12.71	95.00
75%	45.67	38.46	0.8421	14.25	4.180	146.0	44.00	12.71	80.00
50%	30.45	20.06	0.6590	18.39	5.390	146.0	44.00	12.71	65.00
25%	15.22	9.287	0.6100	21.18	6.210	146.0	44.00	12.71	55.00

The 25, 50 % points have incorporated a cycling penalty per AHRI 550/590.

		kW/Ton	EER	COP
With Ambient Relief (per AHRI 550/590)	IPLV.IP	0.7209	16.64	4.883

EVAPORATOR DESIGN DATA	(Based on Water)
Entering Temperature ˚F	54.00
Leaving Temperature ˚F	44.00
Design Flow (GPM)	146.0
Pressure Drop (Full Load)	5.504 PSI / 12.71 ft H2O
Minimum Flow	146.0
Fouling Factor (h-ft2-°F/Btu)	.000100

CONDENSER DESIGN DATA	Based On Sea Level Elevation
Design Ambient ˚F	95.00
Minimum Ambient ˚F	-20.0
Coil Type	Al/Cu Condenser Coils-No Coating

CHILLER DATA	
Compressor Description	Scroll

Voltage: 208/60/3

Certified in accordance with the AHRI Air-Cooled Water-Chilling Packages Certification Program, which is based on AHRI Standard 550/590 (I-P) and AHRI Standard 551/591 (SI). Certified units may be found in the AHRI Directory at www.ahridirectory.org

Software Version# : 1.0.4435.30000

Performance Run Date: 7/25/2019 12:51:24 PM

Product Overview:

Model Description	Compressor Description
(4) ASP060XC14A2AL1AAASN-410A	Scroll

Services & Special Features:

- Multiple, independent refrigeration systems
- Chiller Waterside Maximum Working Pressure is 150 PSIG
- Stainless Steel Evaporator
- Lead Compressor Sequencing (24hrs)
- Automatic Internal Rescheduling If Fault Occurs
- Automatic Logging Of Any Fault Condition
- Electronic Chilled Water Control
- Quick Interconnect Modular Design
- Designed For Quiet Operation
- Filters In Evaporator Supply Headers
- Stainless Steel Inlet Header
- R-410A Refrigerant
- 5kA SCCR
- Electrical Connection Type - Junction Box
- Warranty: Compressor (5 Year)
- Warranty: All Parts (1 Year)
- Var. Flow Evap (Mot. Valve Supply,Man. Valve Return)
- 15 Amp Convenience Outlet (Circuit 1)
- Al/Cu Condenser Coils
- Two Points of Power Connection
- Low Ambient To -20F, includes VFD's on Fans
- Brazed Plate Evaporator
- 4 Condenser Fans per module
- External Master Controller Box

Excluded By Multistack:

- Any Travel and Diagnosis for Warranties
- Multistack recommends a 2-3 minute minimum loop time. Contact Multistack if you have questions regarding system loop time design

MULTISTACK®

Variable Flow Design Requirements

Chilled Water System (Evaporator)

Ensure a chiller DP transmitter (DP1) is incorporated into the piping design and set to: **7.549** **PSI**

DP1 to be installed directly after the chiller with no pressure adding devices between the chiller and DP1.

Ensure a system DP transmitter(s) (DP2) is incorporated into the piping design

Ensure a system bypass valve(s) (V1) is incorporated into the piping design

Design of system bypass (V1) must be a characterized ball or globe type valve and be pressure dependent

System bypass valve (V1) stroke time needs to be selected for less than 60 seconds

Chiller minimum flow is: **158.4** **GPM**

System bypass valve must be design for a minimum of: **237.6** **GPM**

Note: this is a minimum requirement for the chiller ONLY! Other system components such as pumps or air handling units may have higher minimum flow requirements and bypass sizing may be adjusted accordingly.

Bypass loop volume (Includes piping between V1 & chiller): **480** **Gallons**

Note: the bypass loop should be designed for a minimim of a 2 minute loop at all conditions. To obtain ensure the above volume is met.

Refer to Multistack Variable Flow Engineering Bulletin for more details

The pump or the bypass valve must control to maintain chiller DP setpoint, the opposite device (Pump or Bypass Valve) must maintain system DP setpoint.

When a pump module is supplied by Multistack it will be factory configured to control to DP across the chiller unless otherwise specified and noted on the chiller selection.

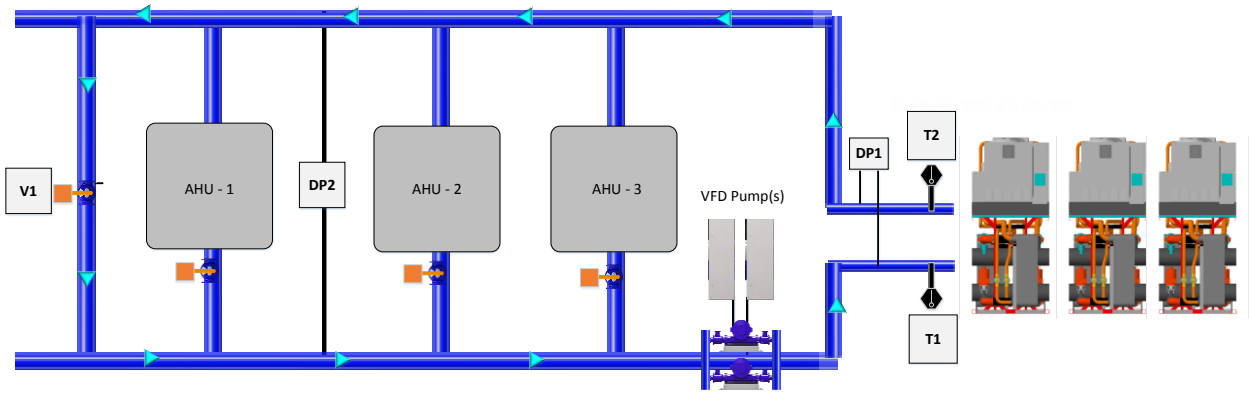

LEGEND

WIRED & CONTROLLED BY CONTROLS CONTRACTOR
V1 – SYSTEM BYPASS VALVE
DP1 – CHILLER DIFFERENTIAL PRESSURE
DP2 – SYSTEM DIFFERENTIAL PRESSURE
VFD Pump(s)

WIRED TO CHILLER MASTER CONTROLLER
T1 – CHW RETURN TEMP SENSOR
T2 – CHW SUPPLY TEMP SENSOR

SCHEMATIC ONLY – REFER TO JOB SPECIFIC DRAWING FOR CONSTRUCTION

TECHNICAL SYSTEMS

Evaporative Condenser Chiller Balance

Model Number: 35E2SD220
Condenser: (1) LSC-170E w/ Subcooling
Evaporator: TXC250-2 Fouling = .0001
Compressor: (1) CSW8583-110 --- (1) CSW8583-110
Fluid: Water
Refrigerant: R134a
Hertz: 60
Altitude: 0 ft

Leaving Fluid [°F]	Ambient Wet Bulb [°F]	Evap [°F]	Condenser [°F]	Est. Capacity [Tons]	Unit [KW]	Comp [KW]	GPM	Evap PD	Comp [KW/Ton]	Unit [KW/Ton]
41	71	33.1	102.0	191.5	158.6	144.2	459.5	3.48	.75	.83
43	71	34.9	102.8	198.0	160.1	145.8	475.1	3.72	.74	.81
45	71	36.6	103.6	204.6	161.7	147.4	491.0	3.97	.72	.79
47	71	38.3	104.4	211.4	163.3	149.0	507.4	4.19	.7	.77
49	71	40.0	105.2	218.4	165.0	150.6	524.2	4.48	.69	.76
41	75	33.3	104.4	188.9	163.4	149.1	453.3	3.38	.79	.87
43	75	35.0	105.2	195.3	165.0	150.7	468.7	3.62	.77	.84
45	**75**	**36.7**	**106.2**	**201.6**	**167.0**	**152.7**	**483.8**	**3.85**	**.76**	**.83**
47	75	38.4	107.0	208.3	168.7	154.4	500.0	4.07	.74	.81
49	75	40.1	107.8	215.3	170.4	156.1	516.6	4.35	.73	.79
41	79	33.4	107.0	186.0	168.8	154.5	446.4	3.28	.83	.91
43	79	35.1	107.8	192.3	170.4	156.1	461.6	3.51	.81	.89
45	79	36.8	108.6	198.8	172.1	157.8	477.2	3.75	.79	.87
47	79	38.5	109.4	205.5	173.8	159.5	493.2	4.00	.78	.85
49	79	40.2	110.2	212.4	175.6	161.3	509.7	4.23	.76	.83

Catalog Rating
Calculations based on 10ºF Range

8°F Evaporator	2,079,704 BTUH	Discharge Line Loss	1°F
10°F Evaporator	2,610,084 BTUH	Suction Line Loss	1°F
Condenser @ 25°F TD	2499 BTUH		

We reserve the right to change or revise specifications and product design in connection with any feature of our products. Such changes do not entitle the buyer to corresponding changes, improvements, additions, or replacements for equipment previously sold or shipped.
4492 Hunt Street | Pryor, OK 74361 | Phone (918) 825-7222 | Fax (800) 264-5329 | © 2002-2019 RAE Corporation

REISSUE			
I	F	D	REVISION BY DATE

MULTISTACK
Sparta, Wisconsin 54656
ALL DIMENSIONS IN INCHES / DO NOT SCALE DRAWINGS

SIMILAR TO:	FIRST USED ON ASSY NO:	STD ENGR SPEC
DRAWN BY: MLG DATE: 10/1/15	CHECKED BY: DATE:	ENGR: APPR: DATE:

D 500-0463

SUBMITTAL
ASP050X/060X

SCALE: NONE

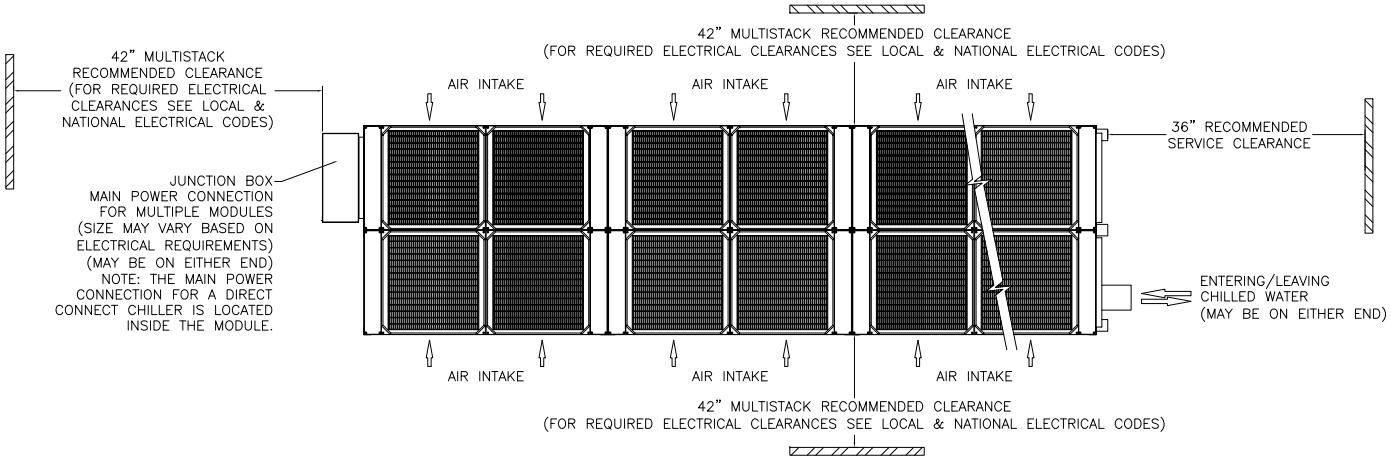

NOTES:
1) 42" RECOMMENDED CLEARANCE ONE SIDE FOR FILTER REMOVAL.
2) IF CHILLER IS GOING TO BE INSTALLED IN A PIT CONTACT FACTORY.

ESTIMATED WEIGHTS (EACH MODULE)

	WET(LBS)	DRY(LBS)
ASP050X	4,780	4,430
ASP060X	4,780	4,430

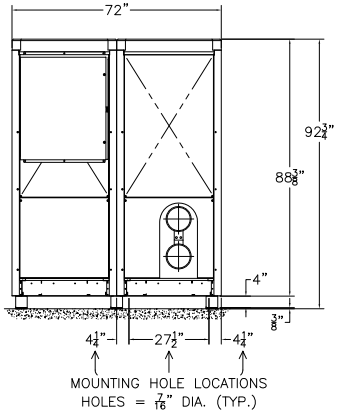

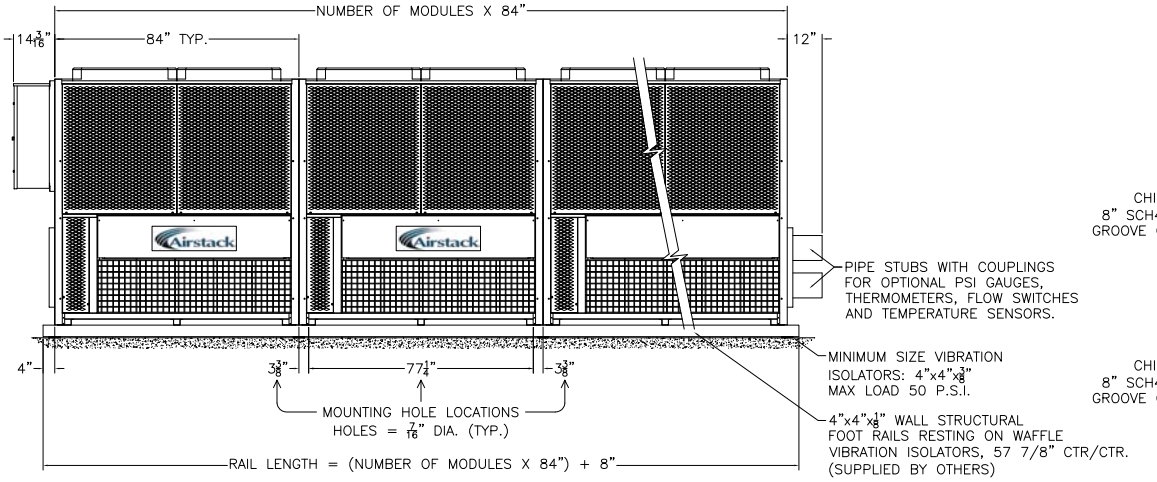

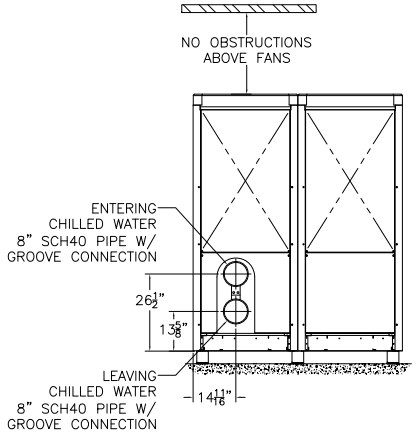

LAYOUT DRAWINGS ARE FOR REFERENCE ONLY, DIMENSIONAL DATA IS SUBJECT TO CHANGE UPON FINAL DESIGN

MAIN POWER 460/3/60	
CIRCUIT 1 ELECTRICAL DATA	
MAX FUSE SIZE	450
MCA	338.2
RLA	305
SCCR	5

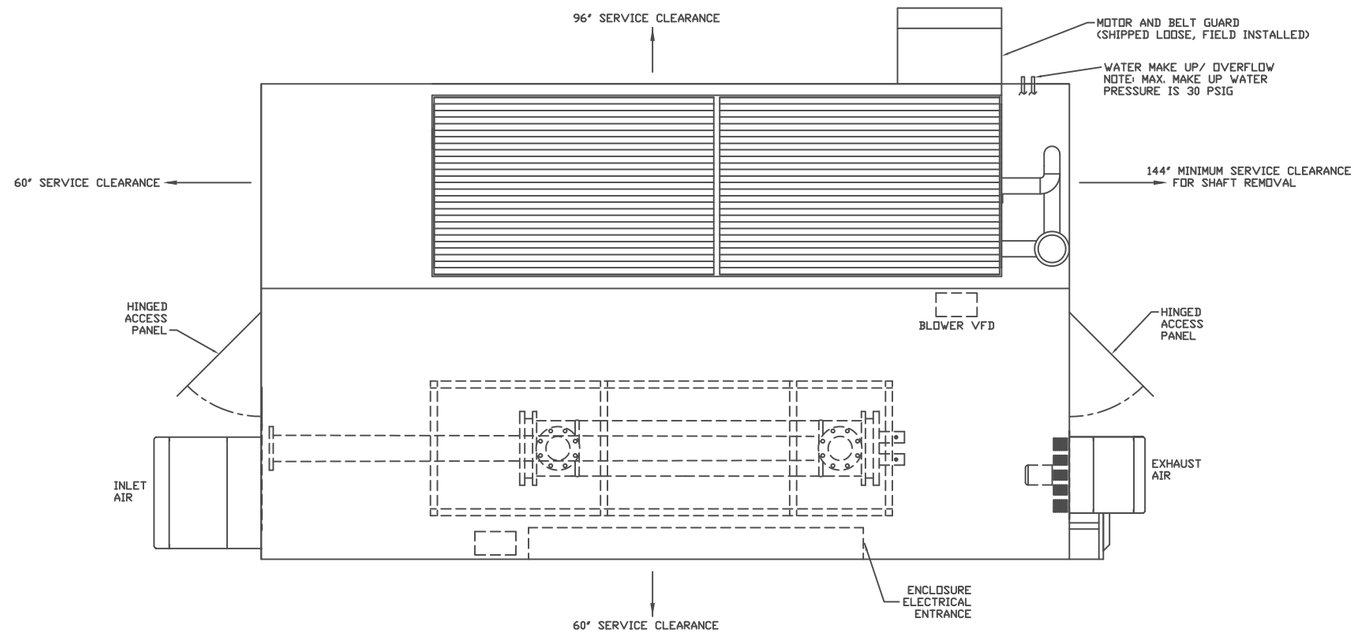

NOTE:
Some available options may not be shown.
Weights shown are for base model without options.

⊕ 2 1/2" DIA. RIGGING HOLES
✳ 5/8" DIA. UNIT MOUNTING HOLES
EST. SHIPPING WT. _23194_ LBS.
EST. OPERATING WT. _26726_ LBS.
ALL DIMENSIONS +/- 1/2"

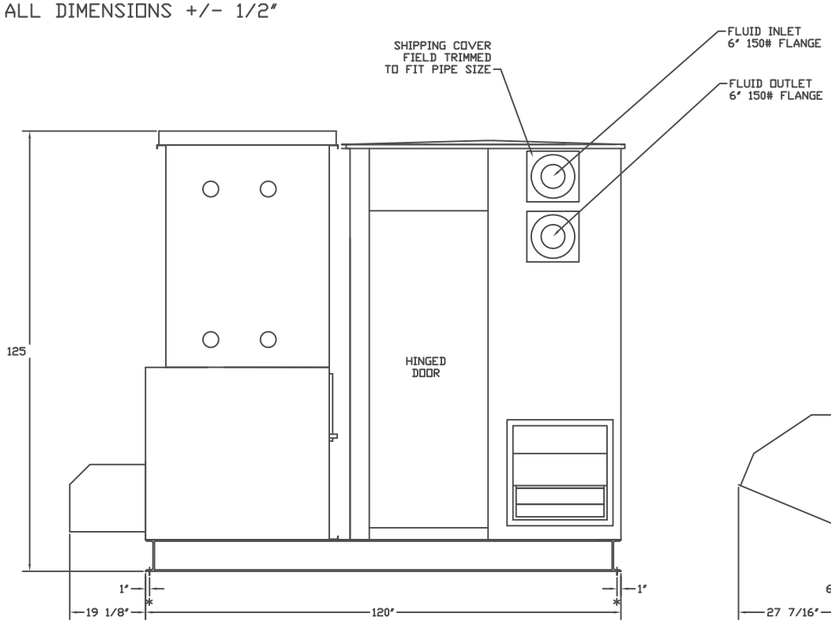

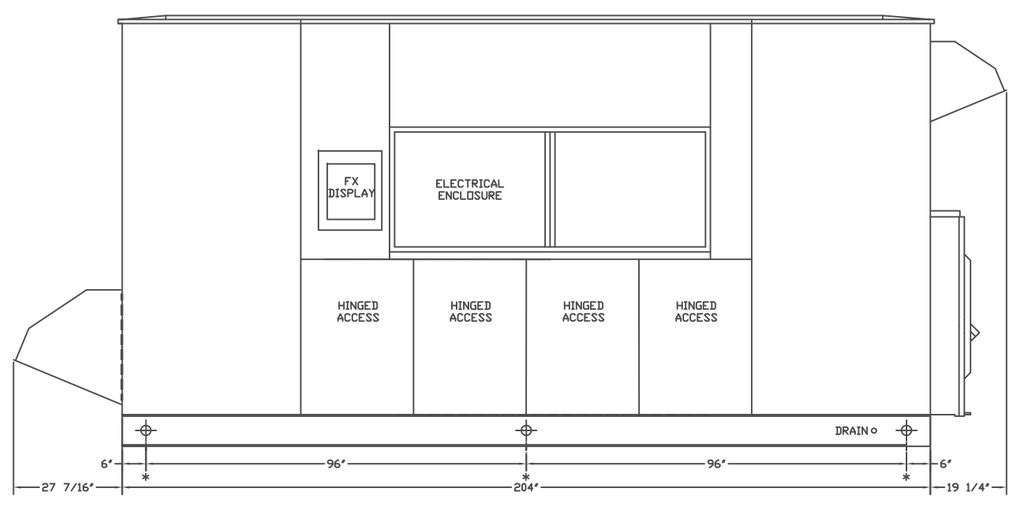

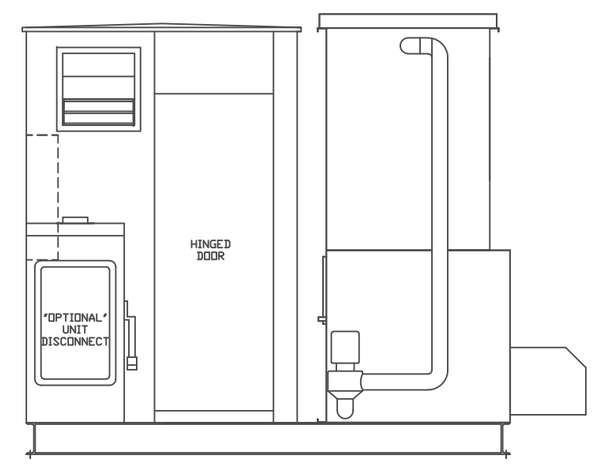

Electrical information and weights are for standard catalog equipment. If options are added, please contact the factory for actual electrical data and/or weights.
We reserve the right to change or revise specifications and product design in connection with any feature of our product. Such changes do not entitle the buyer to corresponding changes, improvements, additions, or replacement for equipment previously sold.

TECHNICAL SYSTEMS
DIVISION RAE CORPORATION

TITLE: UNIT DRAWING 35E2SD220	SCALE: NONE	PROJECT NAME: Untitled		DRAWN BY: ADAMM	REVISED BY: NA / DATE: NA / REV. NUMBER NA
	DATE 7/29/2019 12:00:00 AM			FILE NO: 35E2SD220	RAE SOLUTIONS VERSION 2019.2.5.3
	SUB-TITLE: PR: NA	SE Apr.	QC Apr.	DRAWING NUMBER: NA	