SofisTech
121 Broadway Side, Revere, MA 02151 / (781) 808-4777 / sofistech@yahoo.com

- *New Sign*
- *Internaly LIT*
- *Push Thru*
- *Two poles on the ground*

Colors
Hunter green
Beige
White

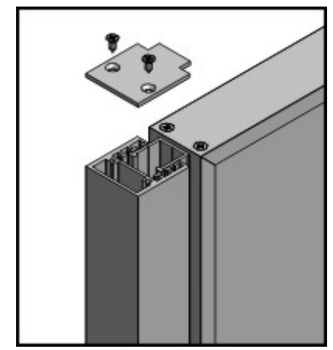

EXAMPLE

Existing Sign to Replace

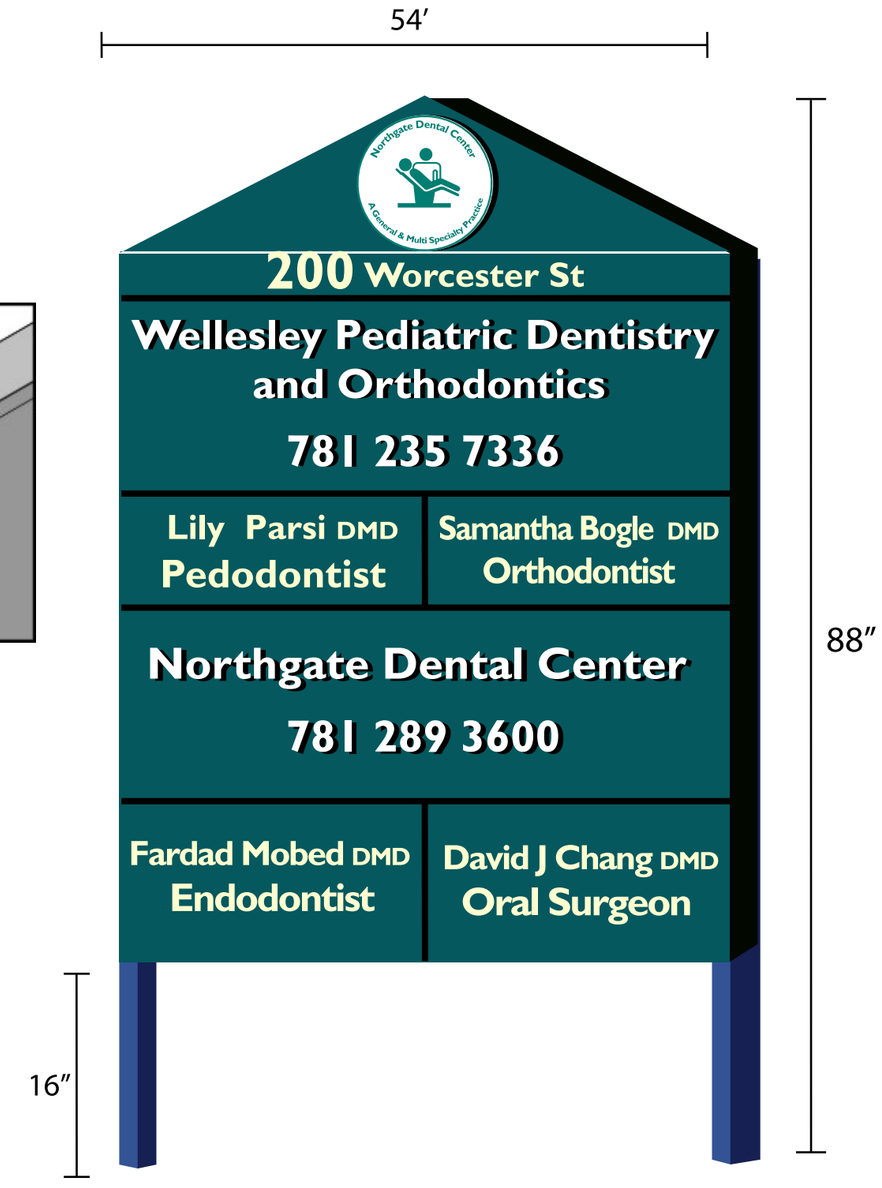

TOTAL PRICE: $4,500.00