TOTAL FLOOR AREA OF ACCESSORY STRUCTURE: 152 sf
EXEMPT FROM TLAG TLAG

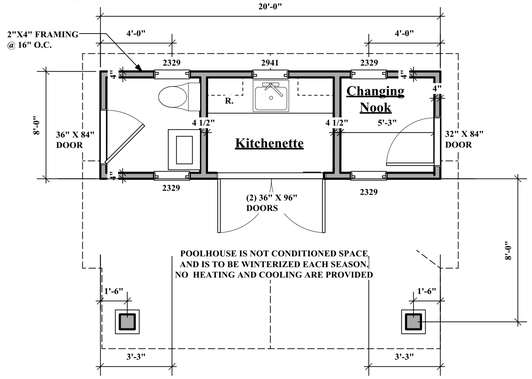

1 A-1.1 First Floor Plan
Scale: 1/4" = 1'-0"

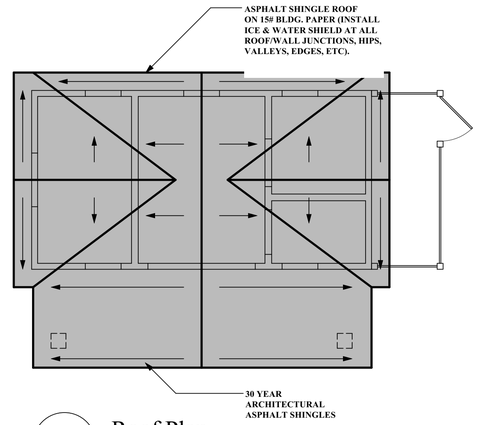

2 A-1.1 Roof Plan
Scale: 1/4" = 1'-0"

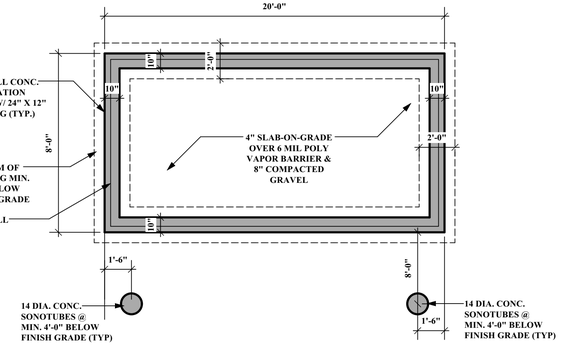

3 A-1.1 Foundation Plan
Scale: 1/4" = 1'-0"

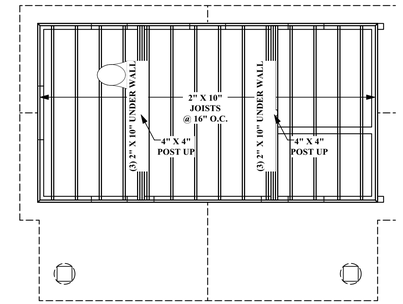

4 A-1.1 First Floor Framing Plan
Scale: 1/4" = 1'-0"

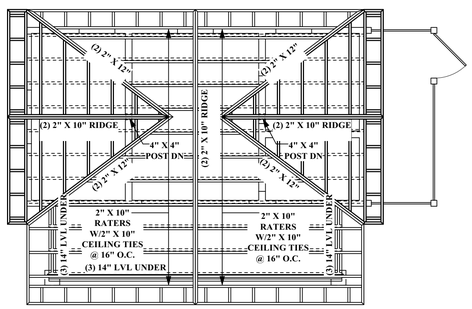

5 A-1.1 Roof Framing Plan
Scale: 1/4" = 1'-0"

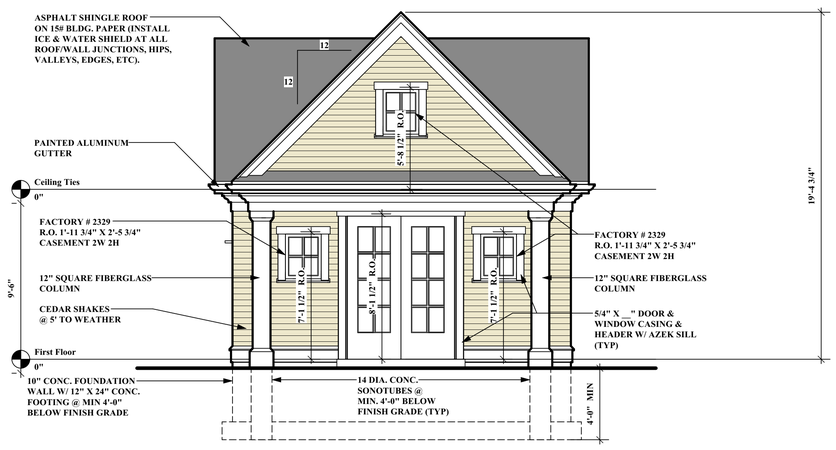

6 A-1.1 Front Elevation
Scale: 1/4" = 1'-0"

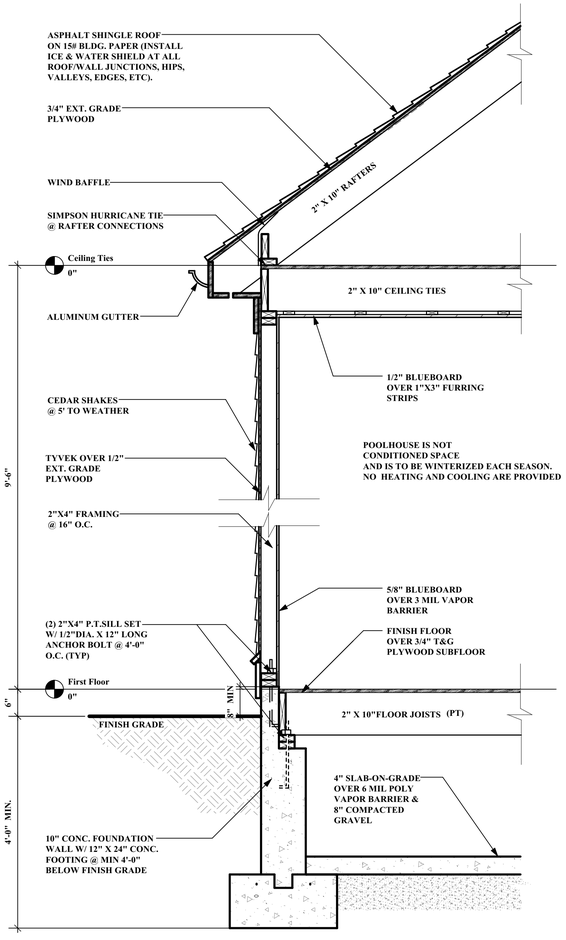

10 A-1.1 Wall Section
Scale: 3/4" = 1'-0"

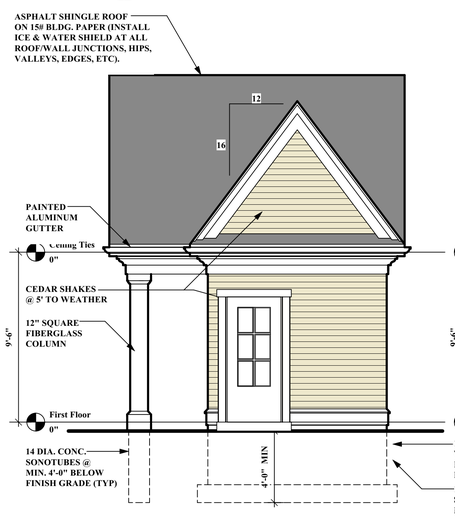

7 A-1.1 Right Side Elevation
Scale: 1/4" = 1'-0"

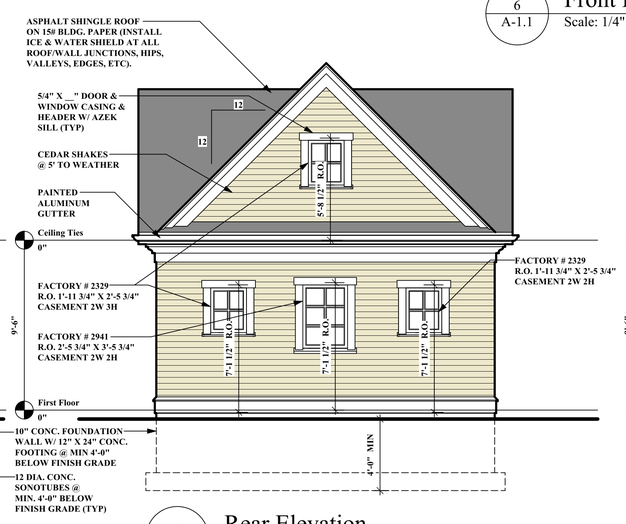

8 A-1.1 Rear Elevation
Scale: 1/4" = 1'-0"

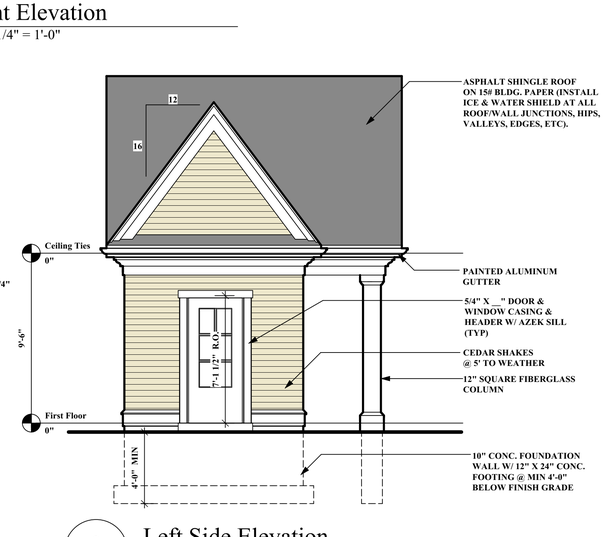

9 A-1.1 Left Side Elevation
Scale: 1/4" = 1'-0"

Pool House

62 Hampshire Rd. Wellesley, MA

OWNER

mckay architects
404 S. Huntington Ave.
Jamaica Plain
Ma. 02130
ph. 617.522.6050
fax. 617.522.3553
www.mckayarchitects.net

REGISTERED ARCHITECT MICHAEL L. McKAY NO. AR 6947 COMMONWEALTH OF MASSACHUSETTS

REV #	DATE	ISSUANCE

OWNERSHIP & USE OF DOCUMENTS

These drawings and specifications are the property and copyright of McKay Architects and shall not be used in whole or in part, or shall be assigned to a third party without the express written permission of McKay Architects.

Contractor to verify all information and dimensions in the field prior to start of construction and is to notify McKay Architects of any discrepancies

Pool House Plans, Elevations, & Section

JOB NO	0054
DATE	4.15.2021
DWG BY	EAL
CKD BY	MLM
SCALE	VARIES

A-1.1